Commonwealth of Pennsylvania
Department of Conservation and Natural Resources
Bureau of Forestry, Minerals Section
P.O. Box 8552
Harrisburg, PA 17105-8552

STATE FOREST TRACT NO. 723

CONTRACT NO.
M-110723-20

OIL AND GAS LEASE FOR STATE FOREST LANDS

THIS AGREEMENT made and entered into on this 5th day of January 2009, by and between the COMMONWEALTH OF PENNSYLVANIA, acting through the **DEPARTMENT OF CONSERVATION AND NATURAL RESOURCES**, hereinafter designated "Department" or "Lessor" and **EXXON MOBIL CORPORATION**, with its principal place of business at 222 Benmar Drive, CORP-GP8-367, Houston, Texas 77060, and authorized to do business within the Commonwealth of Pennsylvania, hereinafter designated "Lessee."

WITNESSETH:

WHEREAS, Lessor is authorized pursuant to the Conservation and Natural Resources Act 18 of 1995 ("CNRA") Act of June 28, 1995, P.L. 89, No. 18, Section 302(a)(6), 71 P.S. §§1349.302(a)(6), to lease State Forest lands for oil and gas development when such disposition is deemed by Department to be in the best interest of the Commonwealth; and

WHEREAS, Department has made a determination that the leasing of oil and gas rights in the premises hereinafter described will be in the best interests of the Commonwealth and has authorized leasing of the same; and

WHEREAS, the proposed leasing of said lands was duly advertised as required by law and on the completion of a competitive, sealed bid submission received by Department on or before September 3, 2008, and with bids submitted pursuant to such advertising, Lessee herein was found to be the highest responsible bidder; and

WHEREAS, the leased premises have also historically been referred to by the Department as Tract 547 and as Tract 799, in addition to Tract 723; and

WHEREAS, the leased premises were previously leased by the Commonwealth of Pennsylvania ("Commonwealth") to Atlantic Richfield Company, contract no. M-110547-12, dated December 14, 1982, the surrender of which was acknowledged by the Commonwealth on December 10, 1986; and

WHEREAS, the leased premises were also previously leased by the Commonwealth to J & J Enterprises, Inc., contract no. M-110723-12, dated September 2, 1987, the surrender of which was effective March 30, 1989; and

WHEREAS, the leased premises were also previously leased by the Commonwealth to Phillips Production Company, contract no. M-110799-12, dated May 14, 1991, the termination of which was was effective May 14, 1997 and which was acknowledged by the Commonwealth on April 15, 1997.

NOW THEREFORE, in consideration of the sum of **FOUR MILLION, ONE-HUNDRED SIXTY-TWO THOUSAND, SIXTEEN DOLLARS AND NO CENTS ($4,162,016.00)** paid by Lessee to Department, receipt of which is hereby acknowledged, and other mutual covenants and agreements hereinafter set forth, Department does hereby grant, demise, lease, and let, exclusively unto Lessee for the purposes only of exploring, drilling, operating, producing, and removing of oil, gas and liquid hydrocarbons; and at locations subject to the approval of District Forester, acting for Department, the laying of pipelines and the building of roads, tanks, towers, stations, and structures thereon to produce, save, take care of, and transport said products, all that certain tract of land, **TRACT NO. 723** containing **3616 acres**, shown on the Map identified as **Exhibit "A,"** and more particularly described on the Oil and Gas Lease Attachment identified as **Exhibit "B"** and as which are attached hereto and made a part hereof, hereinafter referred to as the leased premises. It is understood that the aforesaid acreage and the location shown on the Map identified as **Exhibit "A"** are approximate.

1. TERM OR PERIOD

1.01 It is agreed that this lease shall remain in force for a term of ten (10) years from the date first written above, subject to the conditions hereinafter set forth, particularly Section 20 (First Well) providing for the drilling of the first well within the first five (5) years of the lease, and shall continue from year-to-year thereafter so long as oil or gas is produced in paying quantities from the leased premises hereunder or as long as Lessee is engaged in bona fide attempts to secure or restore the production of oil or gas by conducting drilling, or reworking operations on the leased premises hereunder.

2. LEASE RECORDING AND PUBLIC NOTICE

2.01 Within ninety (90) days following the receipt by Lessee of a fully executed copy of this lease, Lessee shall both record the lease in the county or counties in which the leased premises lie, and also provide a copy of the recorded lease to the Department which clearly shows the recorded reference data. Thereafter, Department shall publish at least the following information in the Pennsylvania Bulletin:

(a) The subject of this lease;
(b) the general location of the leased premises;
(c) the names of Department and Lessee; and
(d) the recording reference data for this lease.

3. RENTAL

3.01 Lessee shall pay to Department a rental for the leased premises at the following rate: the first year's rental shall consist of the bonus payment which was made by Lessee and shall be payable upon delivery of this lease to Lessee. The second, third and fourth year's rentals shall be TWENTY DOLLARS ($20.00) per acre each year, payable upon the anniversary date of this lease. For the fifth

and all subsequent years thereafter, the rental shall be THIRTY-FIVE DOLLARS ($35.00) per acre each year, payable on the anniversary date of this lease.

3.02 The drilling of each well in the leased premises shall reduce the rental set out in the preceding paragraph by the amount of rental on the number of acres attributable to each well as provided in Section 21 (Subsequent Wells), which reduction shall become effective on the next rental date, provided the well is producing in paying quantities. If such wells are drilled on a unit created by a spacing order issued by the Department of Environmental Protection's Bureau of Oil and Gas Management, or on a unit created by a voluntary unitization agreement entered into with the approval of Department, a well drilled on such unit shall reduce the rental above set out by the amount of rental attributable to the acreage contained in the portion of the leased premises included in such unit.

3.03 If at any time there is on the leased premises a well capable of producing natural gas and the well is shut-in, suspended, or otherwise not produced and the natural gas is not used or marketed therefrom during any year ending on an anniversary date of this lease, Lessee shall pay Department at the expiration of each said year for that year a rental payment for each such well at the full rental rate per acre for the "acreage attributable to the well", as referred to in Section 21 (Subsequent Wells) of the lease.

4. GAS ROYALTY

4.01 Lessee must operate each well with a discrete well meter at the well site, which will measure all the gas produced from that well. Lessee will ensure that all meters are maintained according to industry standards.

4.02 Lessee shall pay to Department, as royalty, THIRTY-FIVE CENTS ($0.35) per thousand cubic feet (Mcf) or SIXTEEN PERCENT (16%) of the market value, whichever is higher, for all marketable natural gas, marketable casinghead gas, or other marketable gaseous substances produced and sold or utilized by Lessee at the wellhead from each gas well drilled on the leased premises; the amount to be paid to Department will be the royalty rate (either $0.35/Mcf or 16% of the market value; whichever is higher) multiplied by the fractional interest held by Department and shall be payable monthly at the market price received for natural gas at the sales meter at the time of delivery.

4.03 Department may, at its option, however, demand that Lessee deliver to the credit of Department, as royalty, free of cost, in the pipeline to which Lessee may connect its wells, the equal 16% part of all marketable gas and other marketable gaseous substances produced and saved from the leased premises; the amount to be delivered to Department will be the SIXTEEN PERCENT (16%) part of the gas produced multiplied by the fractional interest held by Department in the oil and gas rights. Lessee shall act to calculate and deliver a gas balancing statement on a quarterly basis to the Department in order to ensure that the Department does not exceed its SIXTEEN PERCENT (16%) share of the marketable gas production. Adjustments for overage or underage delivery of the Department's SIXTEEN PERCENT (16%) royalty share shall be made by reducing or increasing future delivery gas volumes to the Department's account.

5. OIL ROYALTY

5.01 Lessee shall pay to Department, as royalty, SIXTEEN PERCENT (16%) of the field price per barrel (42 U.S. Gallons) at 60° F, produced and saved from the leased premises for all oil, condensate and other liquid hydrocarbons of like grade and gravity which prevails in that area on the day such oil and other products are run into the pipeline or into storage tanks; the amount to be paid to Department will be the SIXTEEN PERCENT (16%) royalty multiplied by the fractional interest held by Department.

5.02 Department may, at its option, however, demand that Lessee deliver to the credit of Department, as royalty, free of cost, in the pipeline to which Lessee may connect its wells, the equal SIXTEEN PERCENT (16%) part of all oil, condensate and liquid hydrocarbons produced and saved from the leased premises; the amount to be delivered to Department will be the SIXTEEN PERCENT (16%) part of the oil produced multiplied by the fractional interest held by Department.

5.03 If oil, condensate, and other liquid hydrocarbons, each in paying quantities, should be developed from the same well, then the oil and the condensate, and other liquid hydrocarbons shall be saved.

5.04 Lessee shall provide tanks or other appropriate storage for accurately measuring any crude oil produced from the lease. Lessee shall gauge, measure, sample, and test all petroleum and petroleum products in accordance with API Standard 2500, "Measuring, sampling, and testing crude oil," Second Edition, March 1961, or as subsequently amended by the same authority. Observed gravity at the observed temperature shall be corrected to (API) gravity and volume at sixty degrees Fahrenheit (60° F) as per the American Society for Testing Materials and the Institute of Petroleum, "ASTM-IP petroleum measurement tables" (ASTM designation No. 1250; IP designation 200).

6. PAYMENTS

6.01 Lessee shall be held responsible for the payment of all rentals and royalties. **Payments shall be mailed to:**

Commonwealth of Pennsylvania
Department of Conservation and Natural Resources
Bureau of Forestry - Minerals Section
P.O. Box 8552
Harrisburg, PA 17105-8552

All checks shall be made payable to the Commonwealth of Pennsylvania. Payments of royalties shall be made monthly within 90 days after each monthly sales period.

6.02 Lessee shall submit statements by individual wells of the production and sales of oil, gas, other hydrocarbon products, and other products within 90 days after each monthly sales period.

6.03 Once it has been determined by Department that Lessee is in default in the payment of any sum of money payable under the provision of this lease for 30 days, Lessee agrees to pay an

additional twelve percent (12%) annual interest on the defaulted amount calculated from the time of such default. This provision is in no way a waiver of the requirement to pay on time.

7. GAS MEASUREMENT

7.01 The volume of gas produced, saved, and marketed shall be measured according to American Gas Association (AGA) standards and according to Boyle's Law for the measurement of gas under varying pressures with deviations therefrom as provided in Paragraph "e" below, on the measurement basis hereinafter specified and shall be determined as follows:

(a) The unit of volume for the purpose of measurement shall be one (1) cubic foot of gas at a temperature of sixty degrees Fahrenheit (60° F) and an absolute pressure of 14.73 pounds per square inch.

(b) The average absolute atmospheric pressure shall be assumed to be 14.4 pounds to the square inch, regardless of actual elevation or location of Point of Delivery above sea level or variations in such atmospheric pressure from time to time.

(c) The temperature of the gas passing the meters shall be determined by the continuous use of a recording thermometer so installed that it may properly record the temperature of the gas flowing through the meters. The arithmetic average of the temperature recorded each 24-hour day shall be used in computing gas volumes. If a recording thermometer is not installed, or if installed and not operating properly, an average flowing temperature of sixty degrees Fahrenheit (60° F) shall be used in computing gas volume.

(d) The specific gravity of the gas shall be determined by tests made by the use of an Edwards or Acme gravity balance, annually, or at such intervals as are found necessary in practice. Specific gravity so determined shall be used in computing gas volumes.

(e) The deviation of the natural gas from Boyle's Law shall be determined by tests annually or at such other shorter intervals as are found necessary in practice. The apparatus and the method to be used in making said test shall be in accordance with recommendations of the Natural Bureau of Standards of the Department of Commerce, or Report No. 3 of the Gas Measurement Committee of the American Gas Association, or any amendments thereof, or any other mutually agreed upon method. The results of such tests shall be used in computing the volume of gas delivered hereunder.

(f) Gas compositional analyses by chromatograph or other approved methods shall be completed as necessary or upon written request and within a timeframe specified by the Department, for the determination of gas composition, specific gravity and BTU content. A copy of the results of all such analyses, whether completed at the specific request of the Department or not, shall be provided by the Lessee to the Department for its records within ninety (90) days of the date of the test.

(g) The following factors used in the calculation of produced gas volumes shall be clearly specified on the meter statements:

Basic orifice factor (F_b)
Reynolds number factor (F_r)

Expansion factor (Y)
Pressure base factor (F_{pb})
Temperature base factor (F_{tb})
Flowing Temperature factor (F_{tf})
Specific gravity factor (F_g)
Supercompressibility factor (F_{pv})

8. AUDITS

8.01 Lessee shall furnish to Department, at its request, the meter charts covering the production of each well on the leased premises. Department may keep such charts for examination for a period not to exceed one-hundred and twenty (120) days. Lessee shall furnish or secure for Department promptly any statements furnished to Lessee by any person or corporation to whom Lessee delivers for sale or transport any oil, gas, or other products produced from the leased premises.

8.02 Lessee further authorizes and directs any person, association, company, partnership, corporation, or other entity to whom it sells or furnishes oil, gas, or liquid hydrocarbons, produced from any well covered by this lease to disclose and exhibit accounts and other instruments to representatives of Department at Department's request having to do with the transactions involving payment to Lessee, its heirs, administrators, executors, successors, and assigns for oil, gas, or liquid hydrocarbons from wells covered by this lease.

8.03 Lessee further grants to Department or Department's designated representative the right, at any time, to examine, audit, or inspect books, records, and accounts of Lessee pertinent to the purpose of verifying the accuracy of the reports and statements furnished to Department, and for checking the amount of payments lawfully due under the terms of this lease. Lessee agrees to provide every aid or facility to enable such audit to be made by Department. If such audit should disclose any gross error or fraud by Lessee in payment of royalties, then Lessee shall pay the cost and expense of the audit together with the deficiency. However, in case of fraud by Lessee, such payments shall not preclude Department in its discretion from canceling this lease upon delivery to Lessee of written notice of Department's intention.

9. INTERPRETATION

9.01 In case of ambiguity, the lease shall always be construed in favor of Lessor and against Lessee.

10. LIMITATION ON WARRANTY

10.01 The Commonwealth is considered to be the owner of the oil and gas rights under the leased premises but makes no warranty as to the presence of oil and gas, nor as to its ownership thereof. In the event it is determined by compromise or by a final judgment of a court of competent jurisdiction that the Commonwealth does not have title to all or part of the oil and gas rights on the lands hereby leased, the royalties thereafter accruing from any part as to which this lease covers less than the full interest in such oil and gas rights, shall thereafter be paid only in the portion which the interest therein, if any, covered by this lease bears to the whole and undivided fee simple estate therein; but any sums of

money previously paid pursuant to the terms of the lease shall not be reimbursable to Lessee, except as hereinafter provided in this paragraph. In the event of an adverse claim to the premises affecting title to all or a portion of the oil and gas rights under the leased premises, notice of such claim will be given to Department which may, with the approval of the Attorney General, enter into an escrow arrangement for future royalties accruing to such disputed portion under terms and conditions that he feels proper to safeguard the rights and interests of the Commonwealth. In the event an adverse claimant files suit against the Commonwealth or against Lessee claiming title to all or a portion of the oil and gas rights under the leased premises, or if the Lessee, after receiving notice of an adverse claim, institutes litigation in a court of competent jurisdiction to secure an adjudication of the validity of the claim, the royalties accruing to the litigated portion shall be placed in an escrow account until such time as the ownership of the disputed interest shall be determined by a court of competent jurisdiction. The royalties placed in escrow shall be refunded at the direction of the court in an amount proportionate to the outstanding title if it is finally determined by compromise or by a court of competent jurisdiction that all or part of such rights are not owned by the Commonwealth.

10.02 This proportionate reduction clause shall not apply to and shall not reduce the bonus payments or rents payable under this lease.

11. LAWS, RULES AND REGULATIONS

11.01 Nothing in this Lease shall in any way be so construed as to impair the powers, privileges or duties of the Commonwealth, or its representatives, in the execution of the laws of the Commonwealth or the applicable rules and regulations promulgated thereunder, now in force or hereafter enacted or adopted.

11.02 The Lessee is solely responsible for obtaining any and all local, State or Federal permits or other approvals necessary for and associated with any of the operations related to this lease, and shall be held liable by the Commonwealth of Pennsylvania, any agency of the Commonwealth, or any other local or Federal authority for the violation or non-compliance of any relevant laws, rules, and regulations, including, but not limited to the following: the Air Pollution Control Act, as amended (Act of January 8, 1960, P.L. 2119,35 P.S. 4001, *et seq.*); the Clean Streams Law, as amended (Act of June 22, 1937, P.L. 1987, 35 P .S. 691.1, *et seq.*); the Solid Waste Management Act, as amended (Act of July 7,1980, P.L. 380, No.97, 35 P.S. 6018.101, *et seq.);* the Oil and Gas Act, as amended (Act of December 19, 1984, P.L. 1140, No. 223, 58 P.S. 601.101 *et seq.);* and the Surface Mining Conservation and Reclamation Act, as amended (Act of May 31, 1945, P.L. 1198, 52 P.S. 1396.1 *et seq.).*

11.03 Lessee shall strictly adhere to all rules, regulations and requirements governing the withdrawl and use of surface and ground waters as administered by the Department of Environmental Protection, the Susquehanna River Basin Commission, the Delaware River Basin Commission, or any other river basin commission having designated jurisdiction of the waters of the Commonwealth [including, but not limited to the Water Resources Planning Act of 2002 (Act 220), 25 Pa Code Chapter 110; SRBC, 18 CFR Ch. VIII § 806.20 - § 806.25]

In addition, Lessee shall obtain written authorization from District Forester prior to using surface waters located on State Forest lands as a take point for fracing or any other well drilling or well development operations. Department reserves the right to deny any such request(s) without cause.

12. INDEMNITY

12.01 Lessee shall, at all times hereinafter, indemnify and save harmless Department from and against all detriment, damage, loss claims, demands, suits, and expenses, or other claims of any kind whatsoever which Department may sustain, suffer, or be subject to directly or indirectly by reason of location, obstruction, presence, maintenance, renewal, or removal of the operations permitted by this lease or resulting therefrom.

13. LIABILITY

13.01 Lessee shall be alone liable and responsible for any pollution or other damage to any portion of the environment in or adjacent to the leased premises which occurs as a result or consequence of Lessee's occupation and use of the leased premises, regardless of whether or not such pollution or damage is due to negligence or to the inherent nature of Lessee's operations, unless an independent intervening cause is found to be the sole proximate cause of the pollution or damage. In any action for civil damages brought under this section, there shall be a presumption that, but for Lessee's occupation and use of the leased premises, the pollution or other damage would not have occurred; it shall then be incumbent upon Lessee to come forward with evidence to rebut this presumption. Any action for civil damages on account of such pollution brought by Department against Lessee shall not bar Department from bringing other actions under the Clean Streams Law or other pertinent law, rule, or regulation of the Commonwealth.

13.02 Department shall not be liable to Lessee for any time during which the leased premises cannot be used.

14. ASSIGNMENTS

14.01 Lessee shall not use, or allow to be used, the leased premises for any other purpose than authorized by this instrument and shall not assign or sublet the leased premises in whole or in part at any time or from time to time without the prior written consent of Department. Lessee shall make application to obtain such consent in writing accompanied by a plat to Department describing the land to be assigned and the interest therein if less than the whole, together with the interest retained by assignor. Assignee shall agree in writing to be bound by all of the terms and provisions of the lease and shall furnish a surety or performance bond satisfactory to Department. After Department has consented to the assignment, assignor shall be released from all liability under this lease arising or accruing subsequent to the date of such assignment as to the part or parts so assigned; and assignee thereof shall, thereupon, be deemed to have assumed and be responsible for the covenants, conditions, and obligations of this lease as to the part or parts assigned. In the event that a portion only of the leased premises is assigned, the default of any of the covenants, conditions, or obligations of this lease by one of the holders of a portion of the leased premises created by an assignment will not affect the interests of a party not in default.

14.02 In the event that the Lessee enters into a "Farmout Agreement" with a third party for the purpose of allowing a "Farmee" to explore, develop, or produce oil and/or gas from the leased premises, or any portion thereof, Lessee shall be liable for enforcing all the provisions of this lease, including the posting of the required plugging sureties for each and every well drilled and operated by the Farmee. Although the Department recognizes a right of the Lessee to farmout its leased premises or portions thereof from time-to-time, Department will hold the Lessee solely responsible for the enforcement of all the provisions of this lease.

15. RELATED AGREEMENTS

15.01 Upon request by the Department for its own records and to protect its own interests, Lessee shall furnish a copy of all agreements made, contracts entered into, and all letters or other memoranda made by or to the Lessee which in any way concern the development, operation, or sale of products related to this lease.

16. SURETY

16.01 PERFORMANCE SURETY - Lessee agrees to give Department a surety or collateral performance bond with evergreen provisions in a form acceptable to Department (i.e., surety bond, irrevocable letter of credit, bank certificate of deposit, etc.), in the principal sum of **TWENTY-FIVE THOUSAND DOLLARS ($25,000.00)** conditioned on the faithful performance by Lessee of the covenants of this lease. The surety shall be further conditioned that, in the event Lessee shall fail to remove its equipment and machinery and properly abandon all wells within one (1) year from the termination of this lease, Commonwealth can execute upon the surety to pay for cost of removal of the equipment and machinery and proper abandonment of the well or wells. In addition, the surety shall be conditioned in favor of the Commonwealth for all damages that may arise as a result of fires, accidents, pollution, or any other causes brought about by Lessee or Lessee's agents occupying the leased premises and in the use of all State Forest roads off the leased premises.

16.02 PLUGGING SURETY - Additionally, prior to acquiring any existing well on the leased premises, or upon the Lessee's decision to keep a newly drilled well, Lessee shall provide Department with a surety or collateral well plugging bond with evergreen provisions in a form acceptable to Department (i.e., surety bond, irrevocable letter of credit, bank certificate of deposit, etc.), in an amount equal to or exceeding the reasonably expected estimated total cost of plugging the well one (1) year after its completion as a producer or shut-in well, said surety to remain in effect until the plugging and abandonment of the well has been completed in compliance with applicable state law, and the well site has been restored and re-vegetated to the satisfaction of District Forester. The minimum well plugging surety coverage per well acceptable to Department as of the date of this agreement is as follows and shall be based on the well's measured depth (MD), regardless of its true vertical depth (TVD):

Measured Depth (MD)	Minimum Surety Amount
Less than 5000'	$ 10,000
5000' to 8500'	$ 30,000
8500' to 10,000'	$ 50,000
10,000' and Deeper	$100,000

16.03 Every five (5) years during the term of this agreement, and effective on the anniversary date of this agreement, new surety amounts may be instituted at the option of Department by notice in writing from Department to Lessee at least six (6) months prior to the anniversary date. Such new surety amounts shall equal the original surety amounts set forth in paragraphs 16.01 and 16.02 herein adjusted for inflation so that the surety amounts will adequately cover the expected lease obligation costs prevailing at the time of adjustment. The new adjusted surety amounts will be rounded off to the nearest ONE THOUSAND DOLLARS ($1,000.00) and will be computed by multiplying the original surety amounts set forth herein by a ratio derived from the Producers Price Index for All Commodities using a base of 1982 = 100, compiled and issued monthly by the U.S. Department of Labor's Bureau of Labor Statistics, as follows:

> The numerator of the ratio shall be the index number for the item "All Commodities" for the month appearing in the issue of the index most recently preceding the anniversary when the surety adjustment is made.
>
> The denominator of the ratio shall be the index number for the item "All Commodities" for the month of August 2008. The parties agree that such index number is 199.9.

If the base period of such index should change to other than 1982 = 100, the aforementioned numerator shall be adjusted by the usual method of linkage of base periods to the end that the ratio shall accomplish its purpose; namely, to adjust the dollar amount of the surety or sureties for changes in the price level between the date of this agreement and the date when the adjustment is made.

In the event such monthly index should be discontinued, or a new or revised one substituted therefore by the Bureau of Labor Statistics or other agencies of the United States of America, such new or revised or other similar index shall be used for the purpose of computations as described in this paragraph, using such conversion factors or other devices which may be generally recognized or adopted in connection with requirements based on this index.

17. COMPREHENSIVE LIABILITY INSURANCE

17.01 Lessee shall, at its sole expense, provide and maintain in full force and effect during the term of this lease such comprehensive liability insurance in an amount not less than: Combined Bodily Injury and Property Damage Liability, TWO HUNDRED FIFTY THOUSAND DOLLARS ($250,000) each occurrence and ONE MILLION DOLLARS ($1,000,000) aggregate which shall protect Lessee and Department from claims for damages from personal injury, including accidental death, as well as claims for property damages, which may arise from operations conducted under this lease or any occurrence on or about the leased premises whether such operations are by Lessee or anyone directly, or indirectly, employed by it. The operation of automobiles or motor vehicles operated in the business of Lessee shall be included or covered by like insurance. In addition, Department shall be immediately advised should Lessee or the insurance company prior to the expiration date indicated on said policy cancel any policy. Department shall be named as additional insured on said liability insurance.

17.02 Lessee or its insurer shall be liable to Department for any damage done to Commonwealth property as the result of Lessee's operations.

17.03 Lessee shall provide Department with certificates of insurance for property damage and liability attesting to the above coverages prior to beginning its operations on the leased premises.

17.04 Department shall be immediately advised should any insurance policy or surety bond be cancelled by Lessee, the insurance company, or bonding company, prior to the expiration date on said document.

17.05 Lessee shall provide Department, upon Department's request, proof of current insurance policy in full force and effect as described in Section 17.01.

18. DEEP WELL CONTROL INSURANCE AND SAFETY – 10,000'+ TVD WELLS ONLY

18.01 Prior to the beginning of well-drilling operations on a true vertical depth (TVD) well of 10,000 feet or deeper, Lessee shall acquire well-drilling insurance coverage in an amount estimated to be sufficient to cover control of well, seepage and leakage, pollution, cleanup and contamination, unlimited redrilling and/or reworking expenses, and equipment in Lessee's care, custody and/or control. Said insurance coverage shall be continuously maintained until the cessation of any well-drilling operations, well-reworking operations, well-completion operations and well-to-pipeline-hookup operations.

18.02 Insurance in the amount of at least TWENTY MILLION DOLLARS ($20,000,000.00) will be required for drilling into the Trenton-Black River Formation unless Department waives or modifies this amount in writing upon Lessee's request.

18.03 Lessee shall provide a complete copy of the Well Control Insurance Policy to Department and shall not commence well drilling operations until Department has given its written acceptance of the Well Control Insurance Policy. Termination of the well-drilling insurance coverage must be pre-approved in writing by Department prior to its termination.

18.04 At a minimum, the Lessee-Assured shall ensure that the Well Control Insurance Policy complies with and includes the following provisions, or provide alternate provisions which are acceptable to the Department:

(1) A minimum of a 10,000 psi double ram and a 5,000 psi annular blowout preventer and a fully operational remote closing device should be used for the well operation and tested successfully at least every thirty (30) days.

(2) No well should be drilled ahead unless the "leak off" pressure determined by the most recent casing shoe test or formation integrity test (as measured by mud weight equivalent in pounds per gallon) exceeds the hydrostatic pressure extended by the actual mud weight in use by at least 0.5 pounds per gallon.

(3) No wells should be drilled with an open hole section of length greater than 8,000 feet.

(4) When the Assured is the Operator of a producing or shut-in well insured hereunder, the Assured should not allow casing pressure which exceeds seventy-five percent (75%) of the rated burst pressure for a continuous period of greater than three (3) months.

(5) When the Assured is the Operator of the well insured hereunder, the Assured should conduct a reasonable review of the drilling and/or workover contractor's personnel and equipment, to ensure that:

(a) The contractor's equipment is of adequate size capacity and pressure rating to perform all anticipated operations;

(b) The contractor has crews with a reasonable level of experience and maintains at least one employee with well-control certification on location at all times; and

(c) The contractor's tubulars, choke manifold and other pressure-rated equipment are tested satisfactorily prior to commencement of operations.

19. OPERATIONS, PROTECTION AND CONSERVATION

19.01 Lessee shall carry on all operations under this lease with all due diligence and in a good and workmanlike manner, in accordance with the best and most up-to-date oil and gas field practices.

19.02 Lessee is responsible for conducting its operations in such a manner so as not to interfere with the rights of other Grantees, Licensees, and Lessees of the Commonwealth, or any other third parties who may have an interest in the State Forest lands located in the vicinity of the area covered by this Lease, including areas of ingress and egress.

19.03 Before any earthmoving activities take place, Lessee shall prepare a Soil Erosion and Sedimentation and Control Plan as required by Department of Environmental Protection or applicable County Conservation District office. A copy of the plan shall be forwarded to the District Forester upon request.

19.04 Lessee shall construct a fence around all potentially dangerous surface structures or equipment to prevent public access. District Forester shall have the discretion to order such fencing where protection of the public is deemed necessary. All equipment which is unguarded and unfenced shall be posted with hazard warning signs.

19.05 Lessee covenants and agrees to conduct all operations in such a manner as to comply with the provisions set forth in the STIPULATIONS FOR PROTECTION AND CONSERVATION OF STATE FOREST LANDS, identified as **Exhibit "C"**, attached hereto and made a part hereof.

19.06 Lessee covenants and agrees to conduct all operations in such a manner as to comply with the provisions set forth in the INVASIVE PLANTS AND REVEGETATION GUIDELINES FOR STATE FOREST LANDS, identified as **Exhibit "D"**, attached hereto and made a part hereof.

19.07 Lessee covenants and agrees to conduct all operations in such a manner as to comply with the provisions set forth in the OIL AND GAS LEASE ACCESS ROAD SPECIFICATIONS FOR STATE FOREST LANDS, identified as **Exhibit "E"**, attached hereto and made a part hereof.

20. FIRST WELL

20.01 Unless sooner terminated as otherwise herein provided, Lessee shall commence a well ("FIRST WELL") on the leased premises, or on unitized acreage containing a portion of the leased premises contained within the unit, within five (5) years from the date first written above and shall drill said well with due diligence. In the event the aforesaid well is not commenced within the above mentioned five (5) year period, this lease shall be automatically terminated in its entirety, unless the Department, at its sole discretion, grants in writing to the Lessee a continuation of the lease in effect on a year-to-year basis. Said extention shall be granted only when the Department considers it to be in the best interests of the Commonwealth. Said extension must be granted in writing by the Department to the Lessee at least thirty (30) days prior to the fifth anniversary date of this lease.

20.02 The rental rate provision of the lease shall not be affected by such extension of the 5-year first-well deadline. Additionally, the granting of such extension period shall in no way affect the anniversary dates of this lease, or the rights and responsibilities of Department and Lessee associated therewith.

21. SUBSEQUENT WELLS

21.01 If the "FIRST WELL" drilled by Lessee, or any subsequent well, is productive of oil and/or gas, and the well is expected to return the investment and operating costs on that well during the anticipated productive life of the well to its economic limit, then Lessee shall drill an additional well on the leased premises or on a unit containing a portion of the leased premises but not necessarily on the portion of the leased premises contained within the unit, if such a well would be drilled by an ordinary prudent operator acting under the same or similar circumstances. If Lessee concludes an additional well is not justified, then Lessee shall submit to Department the information upon which its conclusion is based. Upon review of such information, if Department determines that an additional well should be drilled, then Lessee shall have the option of drilling an additional well within two (2) years from Department's determination or releasing all of the acreage covered by the lease except for the following:

(a) forty (40) acres around each well from which oil is produced as the principal product;

(b) three-hundred twenty (320) acres around each well completed above the top of the Onondaga Formation from which gas is being produced as the principal product;

(c) six-hundred forty (640) acres around each well completed below the top of the Onondaga Formation from which gas is being produced as the principal product; or

(d) that amount of leased acreage actually contained within an established unit, whichever is less.

21.02 Lessee shall not be required under this provision, to drill more wells than required or allowed under any spacing order, rule, or regulation of the Department of Environmental Protection's Bureau of Oil and Gas Management, or in the absence of any such order, more than one well for each well completion depth horizon described in Section 21.01 above.

21.03 The amount of acreage around the subsurface location where oil and gas enters the well bore, commonly referred to as the "take point", included in a spacing unit ordered by the Department of Environmental Protection's Bureau of Oil and Gas Management, or in the absence of any such order, the well completion depth horizons described in Section 21.01 above, shall be referred to elsewhere in the lease as "acreage attributable to a well," which comprises acreage directly above the subsurface "take point."

22. DEVELOPMENT AND WELL SPACING

22.01 Lessee agrees to drill such wells as a reasonably prudent operator would drill under the same or similar circumstances and after discovery of oil or gas on the leased premises, to develop and produce from the described leased premises efficiently, economically, without waste, and to the best advantage of Department.

22.02 Lessee is limited to fourteen (14) well pad locations of reasonable dimensions on the leased premises. Lessee shall have the option to drill vertical or horizontal well(s), or a combination thereof, from a single well pad location. Multiple wells drilled on the same well pad location may target different depths and horizons.

22.03 Upon written request by Lessee, Department may waive, in writing, the number of well pad locations specified in Section 22.02 above if, in Department's judgment, such a waiver is justified and in its best interests.

23. DRILLING RESTRICTIONS

23.01 Under Department's multiple use policy, the leased premises is continuously used for recreation, conservation and other purposes, and many other Department-authorized activities may be in progress on the lands. Hence, Lessee shall conduct its operations so as to minimize interference with the other Department authorized activities on these State Forest lands and shall comply with the following restrictions.

(a) No drilling or well site clearing is permitted within 200 feet of any building.

(b) No drilling or well site clearing is permitted within 200 feet of any stream or body of water.

(c) No drilling or well site clearing is permitted within 300 feet of any stream or other body of water designated by the Department of Environmental Protection's Environmental Quality Board as being Exceptional Value Waters.

(d) No drilling or well site clearing is permitted within 300 feet of any picnic area or sheltered area which has been so designated by Department.

(e) No drilling or well site clearing is permitted within 300 feet of any trail, road or existing right-of-way.

(f) No drilling or well site clearing is permitted within 300 feet of any area of historic value, tree plantation, designated overlook, designated vista or fire tower site.

(g) No drilling or well site clearing is permitted within 300 feet of the boundary line of the leased premises.

(h) No drilling or well site clearing is permitted within 600 feet of the boundary line of State Park lands or of designated Wild and Natural Areas on State Forest lands.

(i) In addition the following specific restrictions for this lease shall also apply:

At the time of issuance of this lease agreement, the Department had not identified any certain Areas of Special Consideration on the leased premises. However, due to the changing nature of the Department's environmental databases, such as the Pennsylvania Natural Heritage Program (PNHP), Lessee should check with District Forester before any construction project is initiated to avoid potential conflicts as these areas are subject to change without notice.

23.02 Upon written request by Lessee, Department may waive in writing, any portion of the above restrictions if, in Department's judgment, such a waiver is justified and in its best interests.

23.03 No drilling or production activity, including but not limited to well drilling and construction, pipeline construction, compressor station placement and construction, or road construction shall be permitted, nor shall they be subject to waivers, on the surface of State Parks, State Forest Wild Areas, and State Forest Natural Areas.

24. DRILLING OPERATIONS

24.01 Lessee shall submit to Department and to District Forester for their approval as to location, a plat showing the location of each well before drilling thereof is commenced, and no well shall be commenced until a permit has been issued by Department of Environmental Protection's Bureau of Oil and Gas Management.

24.02 A legible sign listing the name and address of the well operator, the permit number, the farm name, and well number shall be placed in a conspicuous place near where the access road enters the well location. In addition, a legible sign listing the name of the operator and well number shall be attached or painted on the pumping unit, wellhead or meter box of each well.

24.03 Except where Lessee intentionally drills a deviated well to a bottomhole location not vertically beneath the well site, Lessee shall drill a straight hole to the best of its ability. The maximum point at which a well penetrates a producing formation shall not vary unreasonably from the vertical drawn from the center of the hole at the surface. Minor deviations will be permitted for short distances to straighten the hole, to sidetrack junk, or to correct other mechanical difficulties.

24.04 Lessee shall run a device for measuring deviation from the vertical periodically during the drilling of the well and at the total depth, if requested by Department.

24.05 After the completion of an intentionally deviated well, a complete angular deviation and directional survey of the well obtained by an approved well surveying company and certified as to correctness shall be furnished to Department.

24.06 Lessee shall maintain, at all times, the casing control equipment in such condition that will effectively control any oil, gas, or water encountered during operations in a well being drilled, tested, completed, or reconditioned. All drilling wells which are shallower than ten-thousand (10,000) feet shall be equipped with working blowout control equipment tested to twice normal hydrostatic pressure for the depth drilled, and tested to at least ten-thousand (10,000) psia for wells deeper than ten-thousand (10,000) feet that will completely close off the open hole and that will completely close off around any equipment being employed in the well and will be equipped with a bleed-off valve of the proper size and working pressure. If the blowout preventer is hydraulically operated, adequate pressure shall, at all times, be available for efficient operations. Blowout control equipment must be capable, in case of an emergency, to shut in the well at a point at least fifty (50) feet from the wellhead. For wells being serviced, blowout protection equipment shall be of sufficient capacity to control pressures and flow rates measured in the wells being serviced.

24.07 All wells shall be equipped with casing heads of rated working pressure not less than twenty-eight percent (28%) greater than the maximum rock pressure anticipated or rated to withstand test pressure exceeding by ten percent (10%) the maximum well treatment or stimulation pressure anticipated, whichever is highest, with adequate connections and valves available to permit pumping mud-laden fluid between any two strings of casing at the surface. Reconditioning shall be required on any well showing pressure on the casing head, or leaking oil or gas between the producing string or next larger size casing string when such pressure or leakages assume hazardous proportions or indicate the existence of underground waste. No casing shall be perforated until adequate control equipment has been installed and is in good working order. Such control equipment shall consist of a Master Valve and Lubricator, or their equivalent. The entire equipment shall be in good working order and condition at all times.

24.08 Lessee shall test control equipment daily, to the extent possible, without causing premature removal of drill pipe from the hole while drilling, and record the results of such tests daily.

24.09 Whenever an inspection shows that the casing or control equipment at a well is not adequate, Department may prescribe remedial measures which shall be complied with before any further drilling.

24.10 Drilling mud or salt water of sufficient weight to prevent oil, gas, or water blowouts, or flows to the surface, shall be mixed and ready to use in wells prior to drilling any reservoir deemed by Department to be capable of flowing liquid or gas to the surface.

24.11 All casing, tubing, and equipment used in the drilling and completion of a well should be in good condition and adequate in strength for the depths to be drilled and the pressures that may be encountered.

24.12 Lessee shall use a casing program which complies with oil and gas statutes, and rules and regulations of the Commonwealth, and which prevents the escape of oil, gas, or water out of one stratum into another, the pollution of fresh water supplies, and blowouts.

24.13 The surface casing shall extend from the surface to a depth below all fresh water zones known to exist in the field and adjacent area to protect them from contamination.

24.14 The production casing shall be of new or reconditioned pipe of a grade and weight designed to withstand the greater of the following pressures to which the casing is planned to be stressed:

(a) The maximum anticipated rock pressure, at any point in the casing string, shall not stress the casing in yield greater than seventy-five percent (75%) of the A.P.I. specified internal yield pressure of the pipe at minimum yield, as shown in A.P.I. Bulletin 5-C-2, dated April, 1972, or later amendments.

(b) If the well is to be fractured, the casing shall be designed so that the fracture pressure anticipated, at any point in the casing, does not exceed the A.P.I. specified internal yield pressure of the casing at minimum yield, as shown in A.P.I. Bulletin 5-C-2, or later amendments.

24.15 After cementing and before perforating or drilling-in, the casing shall be tested by pump pressure at the wellhead to a pressure twenty percent (20%) greater than the anticipated maximum pressure at the wellhead. If, at the end of thirty (30) minutes, pressure shows a drop of fifty (50) pounds per square inch or more, the casing shall be repaired sufficiently to withstand the pressure test described herein. After corrective operation, the casing shall again be tested in the same manner.

24.16 All surface casing and production casing shall be cemented in the ground with good quality cement equaling or exceeding A.P.I. specification in the manner hereinafter described.

24.17 Cementing of all casing strings shall be accomplished by pump and plug or another method approved by Department. Sufficient centralizers shall be attached to the casing to keep it centered in the hole during cementing.

24.18 An attempt shall be made to circulate the cement to the surface in cementing the surface casing. In cementing the surface casing, cement of sufficient quantity shall be used to fill the calculated annular space plus twenty percent (20%) back of the casing shoe to the surface. In the event that the cement cannot be circulated to the surface, due to the presence of fractures or other lost circulation

zones, Lessee shall determine, as accurately as possible, the depth of the top of the cement in the annular space behind the surface casing and record it on the well record.

24.19 In wells where cement has not been circulated to the surface, there must be sufficient good quality cement in place in the annular space behind the casing to tightly hold the casing in place so that the escape of oil, gas, or water from one stratum to another, or to the surface, does not occur behind the casing.

24.20 Cement shall be allowed to stand a minimum of twenty-four (24) hours before drilling the plug or initiating tests. The waiting period for cement to harden may be reduced from twenty-four (24) hours upon approval by the Department.

24.21 Lessee, its agents, contractors and subcontractors, and employees of contractors and subcontractors, shall not allow the well to blow open, except in case of an emergency, over twenty-four (24) hours after drilling-in. Lessee will pay Department, at the regular royalty rate, for any gas allowed to escape, except in case of an emergency not caused by Lessee's operations, after this initial twenty-four (24) hour period. Such gas will be estimated by a method approved by Department.

24.22 After an initial open flow test has been taken, all future determinations of open flow potential shall be made by the United States Bureau of Mines, Back-Pressure Method (USBM Monograph 7) or by other methods standard to the industry and approved by Department.

24.23 The determination of the initial open flow of a well, as that phrase is used in this lease, shall be made before any attempts are undertaken to increase the flow of such well through mechanical or chemical stimulation.

24.24 Annually or when requested in writing by Department, Lessee will determine the open flow potential of each producing well as required in Section 24.21 and will also take a twenty-four (24) hour reservoir pressure test and will furnish Department a copy of the results of all such tests. Department may, at the request of Lessee, waive, in writing, all or parts of this requirement if, during any calendar year, production averages less than sixty (60) Mcf per day and/or the pressure tests show reservoir pressures to be less than one hundred (100) psi.

24.25 Lessee shall, at all times, conduct prudent drilling operations including the setting and cementing of casing in such a manner as will permit the production of oil, gas, and liquid hydrocarbons, without waste and including the taking of all reasonable precaution by the use of proper equipment and drilling practices as will protect persons and property against fires and hazards from blowouts.

24.26 It is agreed that Lessee shall have the privilege of using sufficient water and gas from the leased premises, free of royalty, to run all machinery necessary for drilling thereon only.

24.27 Lessee shall take all safety precautions necessary to prevent the uncontrolled escape of H_2S (hydrogen sulfide) gas from oil and gas wells and facilities.

24.28 In areas where H_2S is known to be present in the formations that are to be drilled, Lessee shall:

(a) install adequate emergency shutdown equipment, H_2S gas detection and monitoring equipment, hazardous condition alarms and personnel safety equipment, particularly protective breathing apparatus at all facilities where H_2S gas in concentrations exceeding 100 ppm is anticipated or used.

(b) Make gas masks and portable H_2S gas detectors readily available for use at all sites, particularly drill sites, where H_2S gas is anticipated or used.

(c) After H_2S has been initially detected by any device, conduct frequent checks of all areas of poor ventilation with a portable H_2S detector.

(d) Use special steel pipe and casing which is resistant to H_2S gas stress cracking, in wells and facilities handling the gas in concentrations exceeding 100 ppm.

(e) Quickly notify and evacuate, if necessary, all persons in the vicinity if dangerous quantities of H_2S gas uncontrollably escape from oil or gas facilities.

(f) Post warning signs around all well sites or other facilities handling toxic H_2S gas in concentrations exceeding 100 ppm. The warning signs should be visible on all approaches to, and at a safe distance from, all facilities handing the H_2S gas, including warning markers on all pipelines which may be used to transmit the toxic gas.

(g) Install a fence around any fixed surface facility handling H_2S gas in concentrations exceeding 100 ppm and keep the gate locked.

24.29 During well drilling and production operations, in order to reduce night lighting pollution in designated dark sky areas, Lessee is required to utilize drilling rigs equipped with fully shielded lighting consistent with Occupational Safety & Health Administration (OSHA) regulations.

24.30 Upon written request by Lessee, Department may waive, in writing, any portion of the above drilling requirements if, in the Department's judgment, such a waiver is justified by new technology or knowledge and/or will be in the best interest of the Commonwealth.

25. WELL RECORDS, LOGS AND REPORTS

25.01 Lessee shall keep a daily drilling record which describes the formations penetrated, and the depth and volumes of water, oil, gas, and liquid hydrocarbons found while drilling each well on the leased premises. An accurate well location plat and any other data that are acquired during the drilling and completion operations for each well, including but not limited to those items listed in Section 26.01 (Confidentiality), shall be provided to the Department within ninety (90) days of the data's collection, or upon oral or written request by the Department and within a timeframe specified by the Department. All above-described data shall be submitted in both hard-copy and digital forms. Digital well logs shall be submitted in .LAS format.

25.02 Upon Department's request, samples of all formations penetrated and parts of cores taken, accurately labeled with the API number of the well and depth interval of collection, shall be furnished to Department at Lessee's expense within one (1) year after completion of each well.

25.03 If the Lessee collects rock samples including but not limited to whole rock core, parts of core, and cuttings from any well borehole(s) on the leased premises and no longer plans to retain said samples at its own or contracted storage facility, Lessee must first offer said rock samples to the Department before their disposal or sale. The rock samples shall be accurately labeled with the API number of the well and depth interval of collection. The Department shall make arrangements for the collection and transport of the rock samples at its own expense.

25.04 Upon written request and within a timeframe specified by the Department, Lessee shall provide Department with production and pressure test data, production and pressure decline curves, gas analysis data including BTU value determinations, water and waste disposal records, well stimulation and treatment records, maintenance records and reports, and/or any other data or records for any well(s) which the Department deems necessary to protect its interests.

26. CONFIDENTIALITY

26.01 To the extent of applicable law, Department intends to keep the following well related documents confidential for a period of three years from the date the well is spud:

(a) all drill time logs
(b) all electric well logs
(c) all nuclear well logs
(d) all acoustic or sonic well logs
(e) all caliper or hole diameter measurement logs
(f) all cement bond or integrity logs
(g) all mud or geologic well logs
(h) all dip measurement well logs
(i) all well flow or production test data
(j) all well completion data
(k) all well fracturing and stimulation data
(l) all well pressure tests or pressure data
(m) all record of lost circulation zones and caving strata
(n) all well casing records
(o) all core analysis, mud log analysis
(p) all well perforation records
(q) all lithologic well logs
(r) all written well history
(s) all well cutting samples requested by Department
(t) drill stem tests and charts
(u) formation water analysis
(v) and any other geophysical well data not specifically named.

26.02 To the extent of applicable law, Department intends to keep the following seismic related documents confidential in perpetuity from the date of acquisition, and further acknowledges that the seismic data submitted to the Department are the sole property of the Lessee and considered to be business or trade secrets:

(a) all raw preprocessed data on tapes, discs, or other storage devices
(b) all processed data on tapes, discs, or other storage devices
(c) all paper or reproducible copies of stacked seismic data presentations
(d) all paper or reproducible copies of migrated seismic data presentations
(e) all paper or reproducible copies of relative amplitude seismic data presentations
(f) all paper or reproducible copies of premigrated stacked seismic data presentations
(g) all paper or reproducible copies of depth conversion seismic data presentations
(h) all paper or reproducible copies of amplitude versus offset seismic data presentations
(i) all paper or reproducible copies of any attribute seismic data presentations
(j) all post plot shot point and receiver location maps
(k) all time-depth conversion charts or calculations
(l) all velocity charts and calculations
(m) all sonic/acoustic well charts and data calculated from well logs
(n) all synthetic seismograms
(o) all seismic models for tuning and velocity variation
(p) and all other incidental or miscellaneous seismic related data or presentations.

26.03 To the extent of applicable law, Department intends to keep the following business documents confidential for the life of the lease agreement from the date of acquisition, and further acknowledges that the business documents submitted to the Department are the sole property of the Lessee and considered to be business or trade secrets:

(a) meter charts
(b) all third party statements related to Commonwealth's royalty volumes and payments
(c) all internal account statements of Lessee or third party related to Commonwealth's royalty volumes and payments
(d) all business books of the Lessee or third parties provided to the Commonwealth to substantiate Commonwealth's royalty volumes and payments
(e) all Lessee and third party contracts related to the Commonwealth's royalty volumes and payments
(f) all production agreements between Lessee and third parties related to Commonwealth's royalty volumes and payments
(g) all farmout agreements between Lessee and third parties related to Commonwealth's royalty volumes and payments
(h) all purchase and sale agreements between Lessee and potential purchaser of the leased premises
(i) all agreements providing for areas of mutual interest between Lessee and third parties
(j) and all other business documents and agreements provided to the Commonwealth that Lessee or a third party consider confidential trade secrets.

27. UNITIZATION

27.01 Lessee shall have the right, at any time or times, to pool and consolidate this lease, in whole or in part, or as to any stratum or strata, with lands or leases adjacent to or in the immediate vicinity of this lease, so as to constitute a unit or units for the purpose of entering with the owners and/or lessees, into joint operating agreements providing for the joint operation and development of the leased

premises, or portions thereof, with adjoining lands to prevent the drilling of an excessive number of wells, or of wells located too close to the boundary of this lease; provided, however, that such agreement and termination thereof shall not become valid unless and until the same shall have been approved in writing by Department; provided further, however, that if such joint operating agreements or unit agreements are entered into pursuant to a valid spacing or integration order, the approval of Department shall not be required.

27.02 Drilling, mining, or reworking operations upon, or production of oil or gas from any part of such unit shall be treated, for all purposes hereunder, as operations upon or production from the leased premises, provided that the Lessee is the owner of the off-lease property.

27.03 Upon production from any part of any such unit, Department shall be entitled to and Lessee shall pay royalties calculated as follows: there shall be allocated to the portion of this lease included in such unit a fractional part of such production on the basis the ratio of the acres from the leased premises included in such unit bears to the total number of acres included in the unitized area, and Department shall be entitled to the royalties provided for in this lease on such fractional part of such production and no more; provided, that if State or Federal authorities shall prescribe a different method of allocation, the method so prescribed shall prevail.

28. OFFSETS

28.01 Upon the failure of Lessee to enter into a unitization agreement to protect affected acreage of the leased premises from drainage through offset wells, Lessee agrees to offset within sixty (60) days any well drilled on leases not owned by the Commonwealth which is completed within six hundred and sixty (660) feet of the boundary line of the leased premises and from which oil is being produced as the principal product, any well drilled on lands not owned by the Commonwealth which is completed within one-thousand six-hundred and seventeen (1617') feet (i.e., 60 acres) of the boundary line of the lease premises and from which gas is being produced as the principal product, or any well drilled on lands not owned by the Commonwealth which is completed within the radius of the drainage areas set by an order of the Department of Environmental Protection's Bureau of Oil and Gas Management; provided, however, that Lessee may present evidence to Department to show that such offsetting well is unnecessary or economically unsound. Upon review of such evidence, Department may, at its discretion, relieve Lessee of its obligation to drill the offsetting well. However, if Department determines that an offsetting well should be drilled, Lessee will have the option of drilling the well as required, or paying to the Commonwealth compensatory royalty on production from the offset well as if it had been drilled based on the production from the completed well which is to be offset and on the ratio the affected acreage bears to the total acreage which would have been drained by the well, or release all the acreage of the leased premises except:

(a) forty (40) acres around each well from which oil is being produced as the principal product;

(b) three hundred twenty (320) acres around each well from which gas is being produced as the principal product; or

(c) that acreage attributable to a well by an order of the Department of Environmental Protection's Bureau of Oil and Gas Management if the affected acreage falls within an area subject to such a spacing order.

28.02 No well on the leased premises shall be shut in if drainage will occur through any well within the aforeprescribed distances for oil and gas wells on lands not owned by the Commonwealth and, if such draining gas wells are on compression, the offset wells on the leased premises shall be placed on compression, as long as safety and environmental integrity are maintained.

28.03 In cases where the offset drilling obligations of this section conflict with the drilling restriction provisions of Section 23, then the drilling restriction provisions of Section 23 shall take precedence and prevail unless waived in writing by Department.

29. OIL AND GAS PIPELINES

29.01 No large diameter, high-capacity natural gas transmission pipelines shall be constructed on the leased premises. Any pipeline that exceeds twelve inches (12") in diameter shall be considered a main transmission line for the purpose of this lease, regardless of its intended use.

29.02 Lessee is herewith granted the right to lay any necessary oil or gas gathering pipelines on or under the leased premises; however, a route map for each line shall be submitted, upon request and for approval, to the District Forester as to location prior to the laying of that line. Where Lessee's pipelines cross State Forest land not already leased to Lessee, Lessee must enter into the customary pipeline right-of-way agreement with Department.

29.03 Lessee does hereby agree that it will, at all times during the continuance and delivery of oil, gas, and liquid hydrocarbons to the market, keep, maintain, and repair its pipelines and equipment to the end that there shall be no leaks or waste of oil and gas and liquid hydrocarbons.

30. GAS STORAGE RIGHTS

30.01 No gas storage rights are demised to the Lessee by this lease.

30.02 If the Lessee wishes to develop the leased premises for gas storage, Lessee must first obtain a Gas Storage Lease from the Department.

30.03 If the Lessee does not wish to develop the leased premises for gas storage, but in the Department's opinion the leased premises exhibit characteristics which indicates its potential for a gas storage reservoir, Department will so inform the Lessee in writing prior to the final plugging and abandonment of the wells and removal of the surface support equipment.

30.04 Any well and equipment identified by Department as necessary for the development of a gas storage facility on the leased premises and which is not planned for development by the Lessee shall first be offered to Department or its nominee or assignee in writing, at the then fair market value of the

well and attendant equipment, at least one hundred twenty (120) days before Lessee begins abandonment procedures.

31. SEISMIC SURVEYS

31.01 Lessee, its agents, contractors and subcontractors, and employees of contractors and subcontractors shall have the right to conduct seismic surveys over and across the leased premises. Prior to conducting any seismic work, Lessee shall submit for approval to the District Forester, a map showing the proposed location of each and every seismic line. When Lessee's seismic lines cross State Forest lands not already under lease to Lessee, Lessee must obtain the customary Seismic Survey Agreement from Department. The performance bond required in Section 16 (Bonding) of this lease shall, hereafter, be conditioned in favor of Department for all damages that may arise as a result of said seismic surveys.

31.02 A final plat will be submitted to Department within ninety (90) days after completion of any seismic survey showing the location, elevation, and depth of shot holes drilled; and indicating which holes contained ground water, at what depth it occurred, and an estimate of the amount of flow.

31.03 During the term of this lease, a copy of all seismic data gathered or obtained from any seismic survey conducted on the leased premises will be made available to Department for review at any time after a period of one (1) year of the date of completion of each individual seismic survey. The Department may examine the information gathered in the seismic survey at the location where such information is normally maintained and worked by the Lessee during regular business hours. The Department hereby agrees that none of the seismic information examined by the Department's staff will be copied or taken from the Lessee's premises without the express written permission of the Lessee.

31.04 Upon termination of this lease, or earlier with approval of the Lessee, the Lessee shall submit to the Department a copy of all seismic data collected by the Lessee or the Lessee's agent which represents the leased premises, including but not limited to those items specified in Section 26.02 above. The submitted data may be in digital form, hard copy form (paper), or in a reproducible form (film or Mylar), and said data will be the "processed" version of the data. The presentation will include the stacked, migrated, and relative amplitude presentations in time as well as depth, if any or all of these presentations are generated from the processing procedures. Special processing, such as amplitude versus offset or any attribute processing, will be supplied in hard copy form only. All hard copies will be in industry standard format, and the digital copy will be presented in the format available or in a format Department requests, as long as it is an industry standard format. The Lessee will not be required to submit interpreted versions of the seismic data.

31.05 If a seismic survey is begun but not completed, any data collected even though incomplete shall be submitted to the Department within 30 days after the seismic effort has been terminated. If the seismic effort is suspended for more than 90 days, all data collected to the date the effort was suspended shall be submitted to the Department.

31.06 A "post plot" map will accompany both the hard copy and digital versions of the data identified in Sections 31.04 and 31.05 above, wherein the shot points are clearly marked on the map in

reference to known landmarks or other reference points so that the location of all shot points can be clearly located. If multiple survey lines are completed during one survey, all lines will be shown on the post plot map in their correct relationship to one another with tie points clearly marked on the map as well as the seismic lines. All post plot maps will be provided at no cost to Department.

31.07 A Data Transmittal Listing is required by Department, to accompany the seismic information identified in Sections 31.04 and 31.05 above which shall be transmitted to Department. Department will acknowledge in writing its receipt of the transmitted information.

32. TEST OF WELL ECONOMY

32.01 For purposes of this lease, if a gas well does not produce more than an average of one (1) Mcf/day of natural gas in a calendar year (calculated by dividing its annual production in Mcf by 365 days), it shall be considered uneconomic (i.e., not in paying quantities) to maintain and operate; and if during the following calendar year gas production from the well also fails to exceed a one (1) Mcf/day average, Lessee shall plug and abandon the well as per Section 33 (Plugging), and restore the wellsite and access road to the satisfaction of District Forester, all no later than six (6) months after the end of said following calendar year.

This provision shall apply to <u>all</u> wells drilled or operated by Lessee on the leased premises, whether the wells are shut-in or producing, unless the Department has informed the Lessee that a well or wells falls under the provisions of Section 30 (Gas Storage Rights).

Department may, at its sole option and in writing, waive all or part of the requirements of this provision to Lessee, if in Department's judgment such a waiver is warranted by economic conditions or other circumstances, and is deemed to be in the best interest of the Commonwealth.

33. PLUGGING

33.01 Lessee shall properly and effectively plug all wells on the leased premises before abandoning, in accordance with the regulations of the Department of Environmental Protection's Bureau of Oil and Gas Management and all applicable laws of the Commonwealth, and in accordance with the DCNR's Standard Well Plugging Procedures as described in **Exhibit "F,"** attached hereto and made a part hereof, or provide an alternative plugging method acceptable to the Department before plugging operations commence, to be approved by the Department in writing beforehand. A copy of the Certificate of Well Plugging showing the plugging procedure used and submitted to the Bureau of Oil and Gas Management shall be supplied to the Minerals Section, Bureau of Forestry for each well plugged and abandoned. In addition to the above-mentioned requirement, upon completion and plugging of a well, a permanent marker of concrete or any other marker approved by Department shall be erected over the well. The marker shall extend from ten (10) feet below the surface to at least two (2) feet above the surface. The name of the person, firm, company, or corporation by whom the well was drilled and the number of the well shall be stamped, cast, or otherwise permanently made a part of the marker. The erection of the marker shall in no way interfere with the vent pipe if one is required. Failure to comply with the above plugging requirements may be reason for cancellation of this lease, in

which case the posted surety would be forfeited to fund the proper plugging of the well or wells by Department.

34. DEPARTMENT'S TERMINATION

34.01 If Lessee shall fail or refuse to pay any rental or royalty due under the terms of this lease within thirty (30) calendar days after Lessee's receipt of demand in writing by Department, or if Lessee shall violate, or fail to perform any of the covenants or provisions of this lease, Department shall have the right to terminate the lease.

34.02 In case of default in the payment of any sum of money due under the provisions of this lease within thirty (30) calendar days after demand in writing by Department or the breach of any other of the terms of this lease, Lessee hereby authorizes and empowers the Attorney General of the Commonwealth of Pennsylvania, or any attorney of any court of record to appear for it in an amicable action of ejectment for the leased premises above described, to be entered by the Prothonotary in which Department shall be plaintiff and Lessee defendant, and confess judgment therein in favor of the plaintiff and against the defendant for the leased premises and authorize the immediate issuing of a Writ of Possession waiving all stay and exemption laws and release of errors.

35. LESSEE'S TERMINATION

35.01 Lessee may, at any time, or from time to time, surrender this lease or any portion thereof if Lessee is not then in default of any obligations under this lease; provided, however, that such surrender must be evidenced by written notice delivered to Department thirty (30) days prior to the effective date thereof, and that Lessee has performed all commitments with which Lessee is charged to the effective date of surrender. It is also agreed that any amount paid as an advance bonus or land rental, previous to the effective date of the surrender, shall be deemed liquidated damages due Department and shall be in no way prorated or subject to claim by Lessee for return to Lessee. The "FIRST WELL" provision shall not be regarded or construed as a commitment or obligation under this paragraph.

35.02 In the event that producing wells are to be retained, Lessee shall be entitled to retain that drainage acreage attributable to each well as previously provided under Section 21 (Subsequent Wells). Lessee shall deliver to Department a release or releases in duly recordable form approved by Department. Lessee shall be relieved of all obligations thereafter accruing as to acreage surrendered and any rental thereafter coming due shall be reduced in the same proportion that the acreage covered hereby is reduced; provided, however, that Lessee shall not be relieved of any obligation, including but not limited to the plugging and abandonment of wells, which accrues prior to such surrender even if the result caused by Lessee's performance or failure of performance of an obligation or covenant does not manifest itself until after the date of surrender.

36. FORCE MAJEURE

36.01 This lease shall not be terminated, in whole or in part, nor shall Lessee be held liable for damages for failure to comply with express or implied covenants hereof if compliance therewith is prevented by, or if such failure is the result of any Federal or State laws, executive orders, rules, or

regulations whether valid or invalid. If, at the end of the primary term hereof, such term has not been extended by production or drilling, as in this lease provided; and Lessee by reason of any of the above recited causes is unable to drill a well on the leased premises for oil or gas, the primary terms and the rental provision hereof shall be extended automatically from year to year for a period not to exceed ten (10) additional years, unless further extension is approved by Department so long as Lessee meets all requirements for payments of money and other obligations to Department; provided, however, upon the removal of such delaying cause, Lessee must commence operations within six (6) months after such removal. During any period that Lessee is unable to produce and/or market any products from the leased premises, by reason of any of the above recited causes, this lease shall remain in full force and effect.

37. REMOVAL

37.01 Lessee shall have six (6) months after termination, abandonment, or surrender of the lease, or any part thereof, in which to plug and abandon all wells; remove all buildings, machinery, equipment, structures, unused pipelines, rubbish, and debris resulting from Lessee's operations; to fill and level all pits; and to the extent practicable, to restore the property to the same condition as when received.

38. RIGHTS RESERVED BY DEPARTMENT

38.01 Department reserves the right to use the leased premises in any and all respects not specifically limited by the terms of this lease.

38.02 Department reserves all minerals within the leased premises other than oil, gas and liquid hydrocarbons and shall have the right to lease those mineral rights to third parties insofar as Department is otherwise legally entitled to lease the same, subject to rights granted to Lessee under this lease.

38.03 Department reserves the right to approve, in writing, all plans for the construction upon the leased premises of structures, rigs, machinery, communication facilities, ways and roads, well locations, pipelines and equipment and for drilling of wells. Detailed written plans for any such construction shall be submitted to Department at least thirty (30) days prior to planned commencement of construction on the leased premises unless, upon due cause shown, Department waives the thirty (30) day requirement and allows a shorter, but reasonable, time for review.

38.04 The surface rights of Department shall be considered dominant and the oil and gas leasehold rights of Lessee servient. Any dispute between the parties hereto concerning surface use shall be resolved in favor of the interests of the public.

39. THIRD PARTIES' RIGHTS

39.01 For the purposes of inspection, the people of the Commonwealth shall have the same access to the leased premises, to Lessee's facilities on the leased premises, and to relevant records as Department (representatives of the Bureau of Forestry) has hereunder, provided that such access to Lessee's facilities on the leased premises is limited to non-hazardous areas during normal business hours, upon written approval, when in the accompaniment of a representative of Lessee, and provided

further that access to records shall be limited to those records which are non-confidential in nature as defined within the lease agreement, Section 26 (Confidentiality).

40. DISPUTE RESOLUTION

40.01 In the event that Lessee wishes to dispute a decision made by Department, the following procedure shall be used to dispute Department's decision:

(a) Department shall fix a time and place for a conference within ten (10) business days from the date of the Department's receipt of the Lessee's written request for a conference.

(b) The conference shall be held within thirty (30) days of the Department's receipt of the Lessee's written request for a conference, unless Department and Lessee agree to an extension of time for the conference.

(c) At such conference, the Director of the Bureau of Forestry or his/her representative shall represent Department.

(d) Department may continue the conference if supplemental data, maps or other information are required to evaluate the basis for Lessee's objections, if further review is needed to ascertain whether a mutually agreed upon settlement is consistent with the terms of the lease agreement, or if all parties to the conference agree that a continuance is beneficial to the resolution of the objection.

(e) Any agreement(s) reached at the conclusion of said conference or follow-up discussions shall be consistent with the provisions of the lease agreement. A record of such agreement(s) shall be documented in writing by the Department, copies of which shall be provided to the Lessee, the appropriate District Forester, and all other parties involved.

41. INTEGRITY PROVISIONS

41.01 Lessee agrees to comply with the CONTRACTOR INTEGRITY PROVISIONS FOR COMMONWEALTH CONTRACTS, attached hereto as **Exhibit "G"**, and made a part hereof.

42. NONDISCRIMINATION CLAUSE

42.01 Lessee agrees to comply with the NONDISCRIMINATION CLAUSE, attached hereto as **Exhibit "H"**, and made a part hereof.

43. RELEASE

43.01 Lessee shall not be granted a final release from the terms of this lease until all records and reports and other data described above have been provided to the Department, all wells required by the Department to be plugged have been plugged and plugging certificates provided, all other terms of this lease have been met, and the District Forester has met with Lessee's field engineer or other authorized

representative on the ground, inspected the premises, and both parties have signed a Statement of Release indicating that any necessary site restoration has been completed. Said release shall not be unreasonably withheld by the Department. In the absence of a two-party signed Statement of Release, the Department shall accept the District Forester's findings based on his/her independent inspection of the leased premises. A copy of the release statement will be provided to the Minerals Section, Bureau of Forestry.

IT IS HEREBY MUTUALLY UNDERSTOOD AND AGREED that this agreement shall be legally binding on the parties hereto, their heirs, administrators, executors, successors, and assigns.

IN WITNESS WHEREOF, Department and Lessee have caused this agreement to be dully executed and have caused their seals to be hereto affixed and attached by their proper officers, all hereunto duly authorized, on the date first above written.

ATTEST:

COMMONWEALTH OF PENNSYLVANIA
DEPARTMENT OF CONSERVATION
AND NATURAL RESOURCES

James R. Grace, PhD
Deputy Secretary for Parks & Forestry

ATTEST:

EXXON MOBIL CORPORATION

(signature and Corporate seal, if available)

(signature)

Typed Name: B. C. Fitzpatrick
Assistant Secretary

Paul W. Watson, Attorney-in-Fact

APPROVED AS TO LEGALITY AND FORM:

OFFICE OF ATTORNEY GENERAL

OFFICE OF GENERAL COUNSEL

CHIEF/ASSISTANT COUNSEL
DEPARTMENT OF CONSERVATION AND
NATURAL RESOURCES

COMMONWEALTH OF PENNSYLVANIA, :
: ss.
COUNTY OF DAUPHIN :

On this the 5th day of January, 2009 before me, the undersigned officer, personally appeared James R. Grace, Deputy Secretary for Parks and Forestry, Commonwealth of Pennsylvania, Department of Conservation and Natural Resources, known to me to be the person described in the foregoing instrument, and acknowledged that he executed the same in the capacity therein stated and for the purposes therein contained.

IN WITNESS WHEREOF, I hereunto set my hand and official seal.

Gene F. Odato
Notary Public

COMMONWEALTH OF PENNSYLVANIA
NOTARIAL SEAL
GENE F. ODATO, Notary Public
City of Harrisburg, Dauphin County
My Commission Expires March 29, 2012

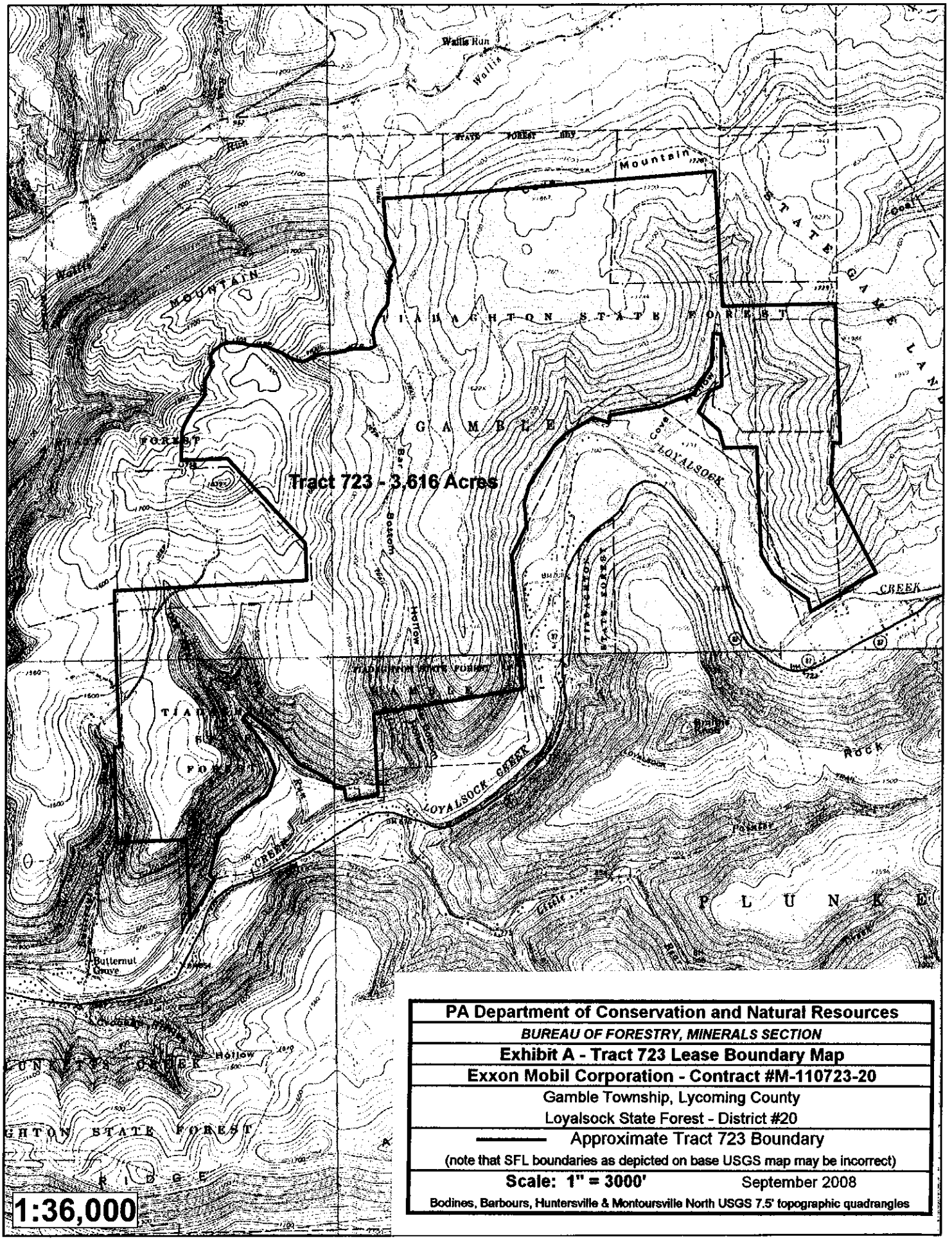

PA Department of Conservation and Natural Resources
BUREAU OF FORESTRY, MINERALS SECTION
Exhibit A - Tract 723 Lease Boundary Map
Exxon Mobil Corporation - Contract #M-110723-20
Gamble Township, Lycoming County
Loyalsock State Forest - District #20
——— Approximate Tract 723 Boundary
(note that SFL boundaries as depicted on base USGS map may be incorrect)
Scale: 1" = 3000' September 2008
Bodines, Barbours, Huntersville & Montoursville North USGS 7.5' topographic quadrangles

COMMONWEALTH OF PENNSYLVANIA
DEPARTMENT OF CONSERVATION AND NATURAL RESOURCES

OIL AND GAS LEASE FOR STATE FOREST LANDS ATTACHMENT

EXHIBIT "B"

DESCRIPTION OF LEASED PREMISES FOR TRACT 723

Attached to and made a part of Oil and Gas Lease for State Forest Lands, Tract 723, Contract No. M-110723-20, by and between: **COMMONWEALTH OF PENNSYLVANIA**, Lessor, and **EXXON MOBIL CORPORATION**, Lessee.

Tract 723

State Tract 723 containing 3,616 acres of Loyalsock State Forest land comprising all or portions of the Nancy Williams, John Barker, Jr., Garrett Collinger, Eliza Beck, Jr., Eliza Beck. Sr., John Barker, Sr., Joseph Williams, Mary Pfeiffer, George Pfeiffer, John Parker, Sr., James Williams and William Parker Warrants in Gamble and Plunketts Creek Townships, Lycoming County, Pennsylvania, conveyed to the Commonwealth of Pennsylvania from John Ball by deed dated August 21, 1917; from Charles Bartles by deed dated April 19, 1909; from Hoover and Bartles by deeds dated November 2, 1905, and May 11, 1906; from Updegraff and Bartles by deeds dated April 19, 1909, and July 18, 1912; from William Parker by deed dated July 18, 1912, and described as follows:

Beginning at a point, said point being the southernmost point of Tract 723, located on the northwest bank of the Loyalsock Creek approximately 6.6 miles north of Montoursville and approximately 2,600 feet northeast of the village of Butternut Grove; thence northward approximately 2,100 feet to a point; thence westward approximately 1,650 feet to a point; thence northward approximately 9,950 feet to a point; thence eastward approximately 1,700 feet to an unnamed old woods road; thence in a general northeasterly direction along the centerline of the road approximately 10,600 feet to a point on the State Forest boundary; thence eastward along the boundary approximately 8,500 feet to a point; thence southward approximately 3,500 feet to a point; thence eastward approximately 2,800 feet to a point; thence southward approximately 3,550 feet to a point; thence westward approximately 150 feet to a point; thence southward approximately 1,100 feet to a point; thence south-southeastward approximately 2,500 feet to a point; thence southwestward approximately 700 feet to a point on the north bank of the Loyalsock Creek; thence in a west-southwesterly direction along the creek approximately 1,200 feet to a point; thence northward approximately 350 feet to a point; thence northwestward approximately 1,700 feet to a point; thence northward approximately 2,800 feet to a point; thence westward approximately 800 feet to a point; thence northwestward approximately 1,250 feet to a point; thence northeastward approximately 750 feet to a point; thence northward approximately 1,250 feet to a point; thence westward approximately 150 feet to a point; thence southward approximately 850

feet to a point; thence south-southwestward approximately 875 feet to a point; thence southward approximately 900 feet to a point; thence west-southwestward approximately 1,250 feet to a point; thence southward approximately 200 feet to a point; thence westward approximately 300 feet to a point on Loyalsock Creek; thence southeastward along the creek approximately 900 feet to a point; thence southward along the creek approximately, 6,950 feet to a point; thence westward approximately 3,950 feet to a point; thence southward approximately 2,000 feet to the creek; thence westward along the creek approximately 650 feet to a point; thence northward approximately 350 feet to a point; thence northwestward approximately 3,450 feet to a point; thence southwestward approximately 100 feet to a point; thence south-southeastward approximately 1,500 feet to a point; thence southward approximately 550 feet to a point; thence southwestward approximately 2,800 feet to a point; thence southeastward approximately 200 feet to a point on Loyalsock Creek; thence southwestward along the northwest bank of the creek approximately 1,250 feet to a point, the place of beginning, containing 3,616 acres.

MAXIMUM PERMISSIBLE WELL PAD SITES

A maximum of fourteen (14) well pad sites will be allowed to be emplaced on Tract 723. Well pad site size and location are subject to the terms of the lease agreement and the approval of the District Forester.

COMMONWEALTH OF PENNSYLVANIA
DEPARTMENT OF CONSERVATION AND NATURAL RESOURCES

EXHIBIT "C"

STIPULATIONS FOR PROTECTION AND CONSERVATION OF STATE FOREST LANDS

The lands embraced in this lease are leased by the Commonwealth of Pennsylvania, acting through the Department of Conservation and Natural Resources, hereinafter designated as "Lessor" or "Department." Lessee hereby agrees to the following stipulations:

1. Environmental Quality Control

1.01 Lessee shall take all necessary precautions and measures throughout the entire course of this lease to ensure strict compliance with all applicable Federal, state, and local laws and rules and regulations promulgated thereunder, whenever enacted, including but not limited to the following state statutes: the Air Pollution Control Act, as amended (Act of January 8, 1960, P.L. 2119,35 P.S. 4001, *et seq.*); the Clean Streams Law, as amended (Act of June 22, 1937, P.L. 1987, 35 P .S. 691.1, *et seq.*); the Solid Waste Management Act, as amended (Act of July 7,1980, P.L. 380, No.97, 35 P.S. 6018.101, *et seq.);* the Oil and Gas Act, as amended (Act of December 19, 1984, P.L. 1140, No. 223, 58 P.S. 601.101 *et seq.);* and the Surface Mining Conservation and Reclamation Act, as amended (Act of May 31, 1945, P.L. 1198, 52 P.S. 1396.1 *et seq.).*

Lessee shall strictly adhere to all rules, regulations and requirements governing the withdrawal and use of surface and ground waters as administered by the Department of Environmental Protection, the Susquehanna River Basin Commission, the Delaware River Basin Commission, or any other river basin commission having designated jurisdiction of the waters of the Commonwealth [including, but not limited to the Water Resources Planning Act of 2002 (Act 220), 25 Pa Code Chapter 110; SRBC, 18 CFR Ch. VIII § 806.20 - § 806.25]

1.02 Notwithstanding any provision in this lease, Lessee shall be held liable by the Commonwealth of Pennsylvania, or any agency of the Commonwealth, for the violation of any relevant laws, rules, and regulations.

1.03 Before any surface or subsurface disturbance, Lessee shall acquaint itself with all of the applicable rules and regulations governed by each respective Act.

1.04 Prior to undertaking actual mining, drilling, or quarrying, Lessee shall confirm, in writing, to Lessor that it has reviewed and thoroughly understands the applicable requirements as contained in each of the aforementioned Acts.

1.05 During mining, drilling, or quarrying, Lessee shall comply with all of the current applicable rules and regulations of the foregoing Acts. Where any of the rules and regulations differ concerning abatement of pollution the more stringent rules shall apply.

1.06 Lessee shall, at all times, perform its work in such a manner as to substantially minimize the possibility of polluting the air land or waters of the Commonwealth with any materials harmful to the environment.

1.07 As development of the leased premises progresses and unforeseen circumstances arise that were not evident during the design, emergency pollution control programs shall be put into effect immediately by the Lessee. In such cases further instructions will be issued by Lessor and will be carried out by Lessee.

1.08 The Air Pollution Control Act of the Commonwealth prohibits the burning of any refuse, rubbish, brush, etc. in the designated air basins of the state, except by approval of the Department of Environmental Protection's respective Regional Air Pollution Control Engineer. Other emissions into the atmosphere are not permitted if they are injurious or hazardous to people, animals, or vegetation.

1.09 Lessee shall strictly adhere to all rules and regulations for collection, removal, transportation, and disposal of solid wastes. Littering of the leased premises will not be permitted.

1.10 The discharge of wastes to streams within the Commonwealth will not be permitted unless such discharges meet the standards of the Department of Environmental Protection.

2. Protection of Property and Operations

2.01 Lessee shall not use or allow to be used the State Forest lands for any other purpose than that authorized by this lease. District Forester will be advised when operations begin and end. Any changes in the original plans, which may be necessary subsequent to the beginning of operations, must be approved by District Forester and Lessor.

2.02 Permission to remove overburden must first be obtained from District Forester who will designate the extent of such removal.

2.03 Lessee shall not conduct any mining, quarrying, excavating, drilling, or stripping operations within sight of publicly traveled roads, unless specifically directed to by District Forester.

3. Public Land Use

3.01 Lessee hereby recognizes and admits that the leased premises are dedicated to the purposes set forth in Environmental, Health, Park, Fish and Game Laws, and Rules and Regulations and Department's Forest Resource Plans promulgated thereunder and Lessee agrees to conduct operations with deference to such purposes.

4. Hunting and Fishing

4.01 Employees of Lessee, its agents, contractors and subcontractors, and employees of contractors and subcontractors shall not engage in hunting or fishing upon said land, except as permitted by law.

5. Animals

5.01 Lessee shall prevent access of wildlife to pits or excavations dug for Lessee's operations by erecting and maintaining fences, or by other means approved by Department.

6. Slush Pit

6.01 Each slush pit will consist of two compartments; one to contain fluids from the drilling operations and the second to contain surface runoff from the drilling site. Unless authorized by Department, all slush pits will be located at approximately the same elevation as the drilling site.

Depending on the topography and slope conditions, the slush pit to contain surface runoff may be located below the drilling site and a safe and reasonable distance from the stream to which the effluent will be discharged. The slush pit used to contain drilling fluids, mud, and water, will be lined with plastic so that no escape of these fluids will occur. If said fluids contain oil or other chemical substances which are harmful to the forest environment, Lessee shall transport these fluids from State Forest lands for disposal. All waste materials from each drilling site will be disposed of at an approved disposal site. All pits shall be filled with earth and leveled at Lessee's expense upon completion of each well. However, nothing in this paragraph shall be construed to permit a violation of any laws, rules and regulations of the Commonwealth.

6.02 Before any operations commence, the location, design, construction, and maintenance of any slush pit must be approved by Department. Pollution potential and aesthetics shall be among the factors to be considered by Lessor.

6.03 If drilling operations are conducted with air, gas, or airfoam, Lessee shall also provide sufficient means by which dust and/or foam dispersal are abated, kept to a minimum, and shall not become a nuisance.

7. <u>Siltation</u>

7.01 Lessee agrees to have on site an approved site-specific Erosion and Sedimentation Control Plan in accordance with the Department of Environmental Protection's Rules and Regulations, Title 25, Chapter 102. Lessee realizes that, as a result of its operation, large areas of land which will be cleared to provide for compressor stations, pipeline rights-of-way, and drilling sites, and which will be exposed to the forces of erosion for varying periods of time could create siltation to nearby streams. Lessee agrees, therefore, to regrade such areas immediately and reseed to either temporary or permanent grasses. Any other type of remedial work necessary to prevent erosion on such areas shall be performed by Lessee.

7.02 Lessee shall, upon initial construction of all drilling sites, restore all highwalls and reseed said highwalls and down slope embankment of each drilling site immediately. Department's representative shall be consulted for final design and approval of each drilling site prior to final restoration.

7.03 Lessee's contractors and subcontractors shall not construct earthen dams across any stream to obtain a water supply for its operations unless approved by Department.

7.04 Lessee shall, on pipeline rights-of-way and access roads, construct water bars or similar diversion channels to carry surface runoff away from the rights-of-way and roads to prevent siltation. During construction, if excess siltation is expected, Lessee shall construct a settling basin at the base of the right-of-way or road to impound runoff and allow sediment to settle prior to discharge into nearby streams.

7.05 Lessee shall construct all access roads to all drilling sites along existing pipeline rights-of-way, where applicable, which are built to service the drilling site, provided that a ten percent (10%) grade can be maintained. All road locations and grades must be approved by District Forester as provided hereunder. All roads will be maintained in a passable condition as per Exhibit E (Access Road Specifications) unless modified by District Forester.

7.06 Lessee shall be responsible for the performance of maintenance of all erosion and sedimentation control facilities and devices.

8. Waters

8.01 Without prior approval of Department, Lessee shall not locate any bore or core hole or any part of rig or slush pit within one hundred (100) feet, or more if required by District Forester, of any stream or body of water on State Forest lands, and hereby agrees to prevent the contamination or pollution of springs, brooks, streams, or other waters on these lands in any manner whatsoever.

8.02 Where construction, operation, or maintenance of any of the facilities on or connected with this lease causes damage to the watershed or pollution of the water resources, Lessee agrees to repair such damage and to take such corrective measures to prevent further pollution or damage to the watershed as are deemed necessary by an authorized representative of Department and to pay for any and all damage or destruction of property, fish, and wildlife resulting from operations under this lease.

8.03 The cost of said property, wildlife, or fish destroyed shall be determined by Department, Pennsylvania Game Commission, or Pennsylvania Fish and Boat Commission using recognized procedures to establish the value of damage.

9. Forest Growth

9.01 Lessee shall not cut, injure, destroy, or remove any forest growth, except that which shall be absolutely unavoidable in conducting its operations and shall obtain proper approval of District Forester ninety (90) days before removal is to be commenced. The full ninety (90) days prior notice may be reduced upon the discretion of District Forester.

9.02 Lessee, under the direction of Department, shall dispose of all tree tops, limbs, brush, slash, and any other forest growth not to be sold or utilized by Department or Lessee which have resulted from clearing operations from strip mine sites, well sites, access roads, pipeline rights-of-way, and other construction sites, according to a plan approved by District Forester.

9.03 Lessee shall dispose of all tree stumps and large rocks resulting from its clearing and construction operations using a plan approved by District Forester.

9.04 Lessee shall pay Department for all forest growth cut or injured on State Forest land as a result of Lessee's operations, regardless of the ownership of the oil, gas, mineral, or surface support rights. Even though Department has been paid for the damage by Lessee, the title to all forest growth will still belong to the Commonwealth, except as provided in Paragraph 9.06. Damage is defined as the cutting or injuring of the forest growth by clearing a site so that personnel and equipment can be brought onto the location to establish a base from which Lessee can undertake its operation.

9.05 Prior to the clearing of the forest growth by Lessee, District Forester will mark and/or designate the area from which forest growth will be removed. The value of the forest growth that will be cut or damaged for the clearing of a road, drilling site, or area to be mined, will be determined by Department based upon timber type, size, and market data, or upon replacement value, for young stands or plantations. Lessee shall then be invoiced for the value as determined by Department. Payment to Department of said invoice must be made before any forest growth may be cut or damaged.

9.06 Lessee shall pay for the forest growth damage at two (2) times its value, as determined by Department; the forest growth shall then become Lessee's property, which then must be removed and sold by Lessee as job requirements dictate. Ownership of the forest growth, not removed and sold by Lessee under this subsection, shall revert to Department six (6) months after invoicing unless modified in writing by District Forester. The minimum forest growth damage charge shall be FIVE THOUSAND DOLLARS ($5,000.00) per acre or as determined above whichever is greater.

9.07 Lessee shall, at direction of District Forester and at its own expense, secure, plant and maintain grasses and/or trees or shrub seedlings and/or game foods on all strip mine sites, well sites, access roads, pipeline rights-of-way and other cleared areas using a plan approved by District Forester. Timing shall be determined by District Forester. Revegetation should be periodically maintained (i.e., liming or fertilizing).

9.08 Lessee shall make full compensation to Department at three (3) times the value of such forest growth cut, injured, destroyed, or removed, to be computed by Department, should additional damage result at any time from the work incident to this lease or the construction, operation, maintenance, or removal of facilities not herein contemplated or specifically mentioned, but which may occur as a result of said work or facilities, or should any forest growth be cut, injured, destroyed or removed prior to payment thereof under Paragraph 9.05 hereof, or due to negligence or unauthorized activities.

10. Fire

10.01 Lessee's employees, agents, contractors, and subcontractors, and employees of contractors and subcontractors shall do everything within their power to prevent or suppress forest fires and shall not allow fires to be set on or adjacent to State Forest lands by Lessee, its agents, contractors and subcontractors, and employees of contractors and subcontractors, except in pursuance to and in accordance with the conditions prescribed in the permission first obtained from District Forester fixing the time, place, and manner of burning. The burning of refuse, brush, slash, debris, or other materials, shall be conducted as approved by District Forester, and shall be so conducted that no living forest growth is damaged or killed.

10.02 Should any fire set by Lessee or any of the persons mentioned above escape in any manner or damage any State Forest land or other property, Lessee shall be liable for all such damages resulting from such escape and for all costs incurred by Department in fighting such fires; and Lessee's officers, agents, and employees in the vicinity, as well as contractors and subcontractors, shall with such assistance as Lessee may have at hand, or be able to summon, render aid in fighting said fire without cost to the Commonwealth.

10.03 Lessee further agrees that during periods of abnormal forest fire danger, District Forester may suspend all or part of the drilling, or other operations on all or part of the State Forest lands until the forest fire danger subsides.

10.04 Lessee, or its employees, shall report promptly all forest fires detected by them to District Forester.

11. Replacement and Repair of Improvements

11.01 Lessee shall replace or repair, as Department may direct, all State Forest signs, markers, corners, fences, other structures, and service utility lines owned or used by Department, which cross or otherwise lie within the State Forest lands destroyed or damaged in any work incident to this lease.

12. Roads, Quarry, and Drilling Sites

12.01 Before drilling sites and access roads are constructed, Lessee shall obtain the District Forester's approval of its plans for such activities. Any roads built at the expense of Lessee in its operations shall not be removed or destroyed and shall become a part of the road system of the State Forest lands, unless otherwise directed by District Forester.

12.02 Lessee recognizes that all roads and trails owned or maintained by Department, which are used in the execution of this lease, were constructed and improved for the use of Department and for the general public having business in and making use of State Forest land. Lessee, therefore, agrees that its operations will not be conducted in such a manner as to prevent, hinder, or obstruct the customary use of such roads and trails by Department or by the public.

12.03 Where roads built by Lessee cross any fence, Lessee shall construct a gate and keep it closed except when the passageway is in use. Lessee shall keep all said roads and trails free at all times from obstruction by logs, brush, or debris resulting from Lessee's operation. District Forester may require Lessee to temporarily discontinue the use of said roads whenever, in his opinion, such action is necessary to prevent their serious damage.

12.04 Upon termination of this lease, Lessee shall repair said roads and trails and leave them in as good condition as at the beginning of this lease of which condition Department shall be the sole judge. In addition, Lessee shall make any repairs to said roads and trails deemed necessary by District Forester to insure adequate and proper drainage, road surface conditions, horizontal alignment, and cross slope.

12.05 Lessee, in its operations, is hereby granted the right to use all State Forest roads, both on or off the leased premises, provided that Lessee agrees to obtain prior written approval from District Forester and to repair any damage to all State Forest roads, on or off the leased premises, when such damage is caused by Lessee's operations; provided, however, if in the opinion of the District Forester in charge, the roads or portions thereof are used by others sufficiently to warrant the apportionment of the maintenance costs, then Lessee may be relieved of the burden of sole maintenance and be required to provide only Lessee's proportionate share as decided by Department through District Forester.

12.06 It is understood that the bond required, under the terms of this lease, shall cover the use and repair of all State Forest roads, bridges and culverts on and off the leased premises utilized by Lessee in conduct of operations under this lease.

12.07 Lessee recognizes the rights and privileges afforded to Grantees by rights-of-way and other agreements executed with Department, prior to this lease, which cross or otherwise lie within the area of this lease; and, therefore, agrees to relocate at Lessee's own expense, all portions adversely affected by work incident to this lease in accordance with the then current rules and orders of the Public Utility Commission of the Commonwealth of Pennsylvania. In the event the Public Utility Commission does not have any jurisdiction, any necessary relocation shall be completed subject to the approval of Grantor.

13. <u>Buildings</u>

13.01 Lessee shall not drill any bore or core hole, carry on operations, make excavations, or otherwise disturb the surface of the lands within two hundred (200) feet of any building. However, if a lesser distance to any building is needed, written approval must be obtained from District Forester.

13.02 Lessee shall consult with District Forester and obtain written approval prior to the construction and erection of any storage facilities, buildings, work sheds, or any other physical structure upon State Forest lands.

14. Appearance

14.01 Lessee shall, at all times, maintain State Forest lands in a neat and presentable manner, removing all rubbish and debris as it accumulates and restoring each individual area or facility within thirty (30) days to as near as possible its original condition as directed by District Forester.

15. Explosives

15.01 Lessee shall not use explosives at any time or in any manner unless approved by District Forester.

16. Restoration and Revegetation

16.01 Restoration and revegetation shall be accomplished in accordance with Lessee's reclamation revegetation plan as approved in advance by District Forester in advance.

17. Water Wells

17.01 Department must approve, in writing, any plan by Lessee, including drilling specifications, for the drilling and development of water wells on state lands.

17.02 A final plat will be submitted within thirty (30) days after completion of each water well showing exact location, elevation, depth of well, lithology penetrated and thickness of discrete lithologic units, depth to water-bearing horizons, estimates of flow rates, results of draw down tests, and results of chemical and bacteriological analyses if such tests are conducted by Lessee.

17.03 Lessee further agrees to supply Department with any other records, driller's logs, memoranda, accounts, reports, cuttings, cores, or other information relative to the drilling, completion, or operation of water wells on the above-described premises. This will include true copies of any electrical or radioactivity surveys made in the wells.

17.04 Lessee shall be familiar with and comply in every respect with the provisions now existing or hereafter enacted of the Water Well Drillers License Act 6 10 of May 29, 1956 (P.L. 1840), providing for the orderly development of the ground water resources of the Commonwealth of Pennsylvania.

17.05 Department reserves the right to use water from wells drilled by Lessee on State Forest land provided such use does not interfere with Lessee's operations.

17.06 Lessee shall contact the District Forester before plugging any water well. Water wells must be plugged from bottom to top with clay, cement, or other impervious materials approved by Department. Any water wells that are of no further use in Lessee's operations, but are deemed viable for Bureau of Forestry uses, may be acquired by Department at its request, at no cost to Department. Lessee, upon relinquishing rights to said water wells, in writing, and upon acceptance of said wells by Department, shall be relieved of any and all plugging responsibility.

18. Pipelines

18.01 Lessee shall refill to contour all ditches or other excavations caused by the construction, operation, and maintenance, or removal of pipelines; construct cross ditches; lime, fertilize, and seed or replant the right-of-way; keep the pipeline and right-of-way in good repair and appearance, and take such other measures as may be deemed necessary by Department to control erosion and sedimentation and to maintain or restore the natural and aesthetic values as directed by Department.

19. Rare and Endandangered Species

19.01 The Pennsylvania Natural Diversity Index (PNDI) shall be searched prior to any earth disturbance to determine possible presence of rare and endangered flora and fauna species of concern.

19.02 If in the course of its operations, Lessee encounters any fauna or flora listed on Federal or state registers of threatened or endangered species, or habitat critical to their survival, Lessee shall immediately cease operations and contact the District Forester so that arrangements can be made with Bureau of Forestry specialists to field check the site to make all necessary preparations to protect and preserve the fauna and flora which may be endangered.

20. Historical and Archaeological Sites

20.01 If in the course of its operations, Lessee encounters any historical or archaeological sites, Lessee shall immediately cease operations and contact the District Forester so that arrangements can be made with Pennsylvania Historical and Museum Commission specialists to field check the site to make all necessary preparations to protect and preserve the artifacts which may be endangered.

21. Contacts with State Agencies

21.01 Lessee shall periodically contact the following state agencies or their successors to keep informed on up-to-date information, policies, rules, and regulations applicable to this lease:

STATE AGENCY	AGENCY'S JURISDICTION ON LEASED PREMISES
DEPARTMENT OF CONSERVATION AND NATURAL RESOURCES	
• Bureau of Forestry Minerals Section P.O. Box 8552 Harrisburg, PA 17105-8552 Phone #: 717-787-4835 FAX: 717-783-5109	Leasing programs, terms, policies, and geophysical regulations for state-owned land and waters. Rare and endangered species, road use, right-of-way, and seismic agreements.
Forest District Name & District Number District Forester Name	Site restoration and revegetation, timber damages, location of well sites, rights-of-way, roads, **notification of wild fires**, etc.
#12 TIADAGHTON Jeffery S. Prowant 423 East Central Avenue S. Williamsport, PA 17702-7425 570-327-3450 FAX: 570-327-3444	Clinton, Lycoming, Tioga and Union Counties
#16 TIOGA Roy A. Siefert One Nessmuk Lane Wellsboro, PA 16901 570-724-2868 FAX: 570-724-6575	Tioga, Bradford and Lycoming Counties
#20 LOYALSOCK Richard A. Glinski 274 Arbutus Park Road Bloomsburg, PA 17815 570-387-4255868 FAX: 570-387-4298	Bradford, Sullivan and LycomingCounties
• Bureau of State Parks Division of Resources Management P.O. Box 8551 Harrisburg, PA 17105-8551 717-787-6674	State Park management policies.
• Bureau of Topographic and Geologic Survey Subsurface Geology Section 400 Waterfront Drive Pittsburgh, PA 15222-4745 412-442-4230	Instructions for delivery of well cuttings and core samples, if requested.

DEPARTMENT OF ENVIRONMENTAL PROTECTION	
• Bureau of Oil and Gas Management Northwest Regional Office 230 Chestnut Street Meadville, PA 16335-3481 814-332-6860 FAX: 814-332-6121	Oil and gas laws, regulations, and enforcement (drilling permits, plugging, etc.), contacts with oil and gas program inspectors for northern counties in PA, including Lycoming and Tioga Counties.
• Bureau of Mining and Reclamation P.O. Box 8461 Harrisburg, PA 17105-8461 717-787-5103	Regulations and enforcement related to coal and non-coal mining operations, including but not limited to blasting, drilling, water discharges, etc.
• Bureau of Land Recycling & Waste Management P.O. Box 8471 Harrisburg, PA 17105-8471 717-783-7816	Disposal and handling of municipal, residual and hazardous wastes; remediation of contaminated soil and water.
• Bureau of Air Quality P.O. Box 8468 Harrisburg, PA 17105-8468 717-787-9702	Blowing gas wells and air drilling, burning of waste materials, trash, emissions, etc.
• DEP Northcentral Regional Office 208 West Third Street, Suite 101 Williamsport, PA 17701 **570-327-3636 (24 hour emergency phone)** **1-800-541-2050 (24 hour emergency phone)**	Notification of spills or accidental releases of regulated substances to soil, surface water or ground water from storage tanks, slush pits, pipeline leaks, blowouts, etc.
• Bureau of Watershed Management Division of Waterways, Wetlands and Stormwater Mgmt. P.O. Box 8555 Harrisburg, PA 17105-8775 717-772-5986	Locating structures or pipelines in streams, rivers, and lakes (i.e., stream encroachment), certain erosion and sedimentation plans.
• Bureau of Waterways Engineering Division of Dam Safety P.O. Box 8554 Harrisburg, PA 17105-8775 717-772-5951	Impoundment of streams for water supplies.

TIOGA COUNTY CONSERVATION DISTRICT	
Director 50 Plaza Lane Wellsboro, PA 16901 570-724-1801	Erosion and Sedimentation Control Plans and issues for projects located in Tioga County.
LYCOMING COUNTY CONSERVATION DISTRICT	
Director 542 County Farm Road Suite 202 Montoursville, PA 17754 570-433-3003	Erosion and Sedimentation Control Plans and issues for projects located in Lycoming County.
SUSQUEHANNA RIVER BASIN COMMISSION	
Executive Director 1721 North Front Street Harrisburg, PA 17102 717-238-0423	Conservation, utilization, allocation, development and management of water resources within the Susquehanna River Basin, including Tioga and Lycoming Counties.

PENNSYLVANIA FISH AND BOAT COMMISSION	
Executive Director P.O. Box 67000 Harrisburg, PA 17106-7000 717-705-7801	Regulation for the protection of fish life and snakes.
PENNSYLVANIA GAME COMMISSION	
Bureau of Land Management 2001 Elmerton Avenue Harrisburg, PA 17110-9797 717-787-4250	Regulations for protection of wildlife, oil and gas leasing on PA State Game Commission lands.
PENNSYLVANIA HISTORICAL AND MUSEUM COMMISSION	
Executive Director State Museum Building 300 North Street Harrisburg, PA 17120 717-787-3362	Protection and documentation of historical and archaeological sites.

LYCOMING COUNTY EMERGENCY MANAGEMENT	
570-433-3166 (24 hour emergeny phone)	**Wildfire notification**, other emergencies.
TIOGA COUNTY EMERGENCY MANAGEMENT	
570-724-4666 (24 hour emergency phone)	**Wildfire notification**, other emergencies.

COMMONWEALTH OF PENNSYLVANIA
DEPARTMENT OF CONSERVATION AND NATURAL RESOURCES

EXHIBIT "D"

INVASIVE PLANTS AND REVEGETATION GUIDELINES FOR STATE FOREST LANDS

1. Pre-construction Inventory and Mapping

1.1 Lessee may elect to perform a pre-construction inventory of invasive plants present on the portion of the leased premises where construction is planned to determine appropriate prevention methods, predict control needs, and assess its level of responsibility for management of invasive species and populations. The inventory objective is to locate established invasive plant species populations.

1.2 If Lessee elects to undertake an inventory as described in Section 1.1, all areas which may be disturbed by the planned construction activity should be inventoried for the plant species listed in *DCNR's Invasive Plants* brochure during the growing season from May through September by a qualified botanist.

1.3 Inventory data should be collected from the entire area of the planned construction on state forest land and any buffer areas that may be appropriate, in grid cells no greater than 150' x 150' in size. The established grid should be digitized into a GIS layer and printed on maps that will be used for field data accumulation. Standard information including date, surveyor name, and grid cell number should always be recorded prior to beginning the actual survey. During the field study the center of each grid cell should be located using GPS, and an inventory created by noting the presence of any invasive plant species or the complete absence of any invasive species within the specified grid cell and a note of the dominant species per plant type (e.g., herbaceous, shrub, tree) should be recorded. For each invasive species occurrence, the cover class within each grid cell should be recorded as trace, low, moderate, or high, according to the *Montana Noxious Weed Survey and Mapping System*. All trace and low occurrence locations should be located by GPS to aid in relocation and treatment. For each invasive species in each grid cell, the average growth stage should be recorded as seedling, bolt, bud, flower, seed set, or mature, according to the *Montana Noxious Weed Survey and Mapping System*.

1.4 If Lessee elects to forego the above described pre-construction survey for invasive species, Lessee shall be responsible for all occurrences of post-construction infestations of invasive species that may be found in the construction area regardless of origin or amount and will be required to perform management and control activity as described in Section 3 below.

2. Prevention

2.1 Where no invasive plants are detected, Lessee should use only PA Department of Agriculture certified seed and weed free soil, dirt, and mulch whenever feasible. If materials certified as weed free cannot readily be obtained, the source of materials being used shall be inspected for invasive plants during the growing season by a qualified botanist and used only if deemed weed-free.

2.2 Mulching with straw rather than hay is recommended to reduce the possibility of introducing invasive species propagules.

2.3 Where heavy infestations of Japanese stiltgrass (*Microstegium vimineum*) are detected during pre-construction surveys, a seed mix of Autumn bentgrass (*Agrostis perrenans*) and deer tongue (*Dichanthelium clandestinum*) should be planted as aggressive competition against the seed-banked invasive Japanese stiltgrass. Seeding specifications will be provided by the District Forester. As an alternative, application of herbicide to large patches of Japanese stiltgrass during the summer with a 2% glyphosate solution in water mixed with surfactant may be utilized at the direction of the District Forester.

2.4 Lessee at its option may, prior to bringing equipment into un-invaded areas or onto state forest land, clean its equipment in an appropriate manner (see http://www.fs.fed.us/eng/pubs/pdf/05511203.pdf) to remove plant parts such as rhizomes and seeds that might be carried on tires and the equipment undercarriage, which may help prevent the spread of invasive species onto adjacent lands.

2.5 Pre-treatment of identified invasive species infestations of herbaceous species or species that reproduce prolifically from rhizome/root segments with herbicides prior to construction may be performed at the direction of the District Forester.

3. Management

3.1 Management and control of established invasive plant populations shall be planned on a species by species basis to determine the best method of control. Lessee and its consultant shall submit a "Management and Control Plan" to District Forester no fewer than three (3) months after the conclusion of all construction activity.

3.2 Lessee shall include a post-construction invasive survey report with the same survey parameters as described in Section 1 above, in the Management and Control Plan. The District Forester and Ecological Services Section will assist Lessee in the development of appropriate management methods by species and/or invasive occurrence.

3.3 Post-construction invasive species surveys along access roads shall be limited to areas where gravel was placed or the existing road was widened for Lessee use. After a period of two growing seasons, any new invasive populations will be assumed to be the result of sources other than the Lessee's construction materials and equipment. Control and monitoring of invasive species found along access roads within two growing seasons post-construction will continue until populations are eradicated.

3.4 Lessee and the Bureau of Forestry will coordinate with the other jurisdictional agencies about species of special concern and the potential impacts invasive species management activity may produce.

4. Monitoring

4.1 Lessee shall make provisions to monitor for invasive species within the area(s) disturbed by the construction activity for a period of five (5) years following construction or until invasive species are not observed on-site for two consecutive years, whichever is longer.

4.2 Lessee shall perform an annual survey for the presence of invasive species within the construction area, as described in 4.1 above, following major construction. The annual survey should follow the same methods as the pre-construction survey method described in Section 1. The only exception to the method described in Section 1 is the grid cell boundaries only need to be checked occasionally with the GPS to ensure that monitoring alignment is consistent with the original inventory alignment.

5. Reporting

5.1 The results of all Lessee annual invasive surveys shall be summarized into a report, which shall include the following elements: methods, a summary of invasive species detected, abundance of each species, number of new populations per species, number of eradicated populations by species, and management recommendations for management and control. Report and raw electronic observation data shall be submitted to District Forester and Ecological Services within 60 days following completion of the report. Submission of any electronic data should occur simultaneously with the written report submission. Data recording and management should be consistent year-to-year so data can easily be compared by grid cell number. The Department reserves the right to audit the findings of the Lessee's reports and as a result of any audit, Department may require alternate methods of management and control.

5.2 Department may publish reports, raw data, or articles summarizing invasive species management and monitoring efforts from time to time. Lessee will be consulted prior to publication of any reports or raw data for comment.

6. Revegetation Plan Guidelines

6.1 Lessee shall utilize a native grass and herb mix for cover and stabilization within the disturbed construction areas. The required seed mix will provide for immediate stabilization and reduce the chance of invasive species establishment. Lessee shall provide for a cover crop to be mixed in with the native grass and herb mix. The cover crop will be either oats or barley if the seeding takes place in the spring or wheat or rye if the seeding takes place in the fall. The cover crop seed mix may be applied at the same time as the native grass and herb mix described below. Hydro-seeding of all seed mixes is acceptable. The cover crop should be applied at 30 lbs/acre. The detail components of the native grass and herb mix are listed below:

Native Grass and Herb Mix
20% Little Bluestem PA ecotype (Andropogon scorparius)
10% Big Bluestem variety "Niagara" (Andropogon gerardii) (genetic origin is NY)
15% Virginia Wild Rye PA ecotype (Elymus virginicus)
10% Indiangrass PA ecotype (Sorghastrum nutans)
10% Deertongue variety "Tioga" (Panicum clandestinum)
5% Swithchgrass variety "Shelter" (panicum virgatum) (genetic origin is WV)
5% Partridge Pea PA ecotype (Chamaecrista fasciculate)
3% Showy Tick Trefoil PA ecotype (Desmodium canadense)
5% Ox-eye sunflower PA ecotype (Heliopsis helianthoides)
2% Autumn bentgrass PA ecotype (Agrostis perennans)
2% Woolgrass PA ecotype (Scirpus cyperinus)
3% Soft Rush PA ecotype (Juncus effuses)
5% Pennsylvania smartweed PA ecotype (Polygonum pensylvanicum)
5% Common Milkweed PA ecotype (Asclepias syriaca)

6.2 The recommended seeding rate for the native grass and herb mix is 15.0 lb/acre. No lime or fertilizer is needed for the Native Grass and Herb Mix. Topsoil should be utilized when possible. Seeding may be accomplished by the broadcast, hydro seeding or drill seeding methods. The Native Grass and Herb mix will be mulched with 1.5 ton/acre of straw mulch.

6.3 The Bureau of Forestry has the right to change the components of the Native Grass and Herb Mix as needed to reflect species that may be more appropriate to the region or habitat that is being altered.

6.4 The use of conifers and shrub plantings for revegetation of well pad sites will be used if determined appropriate by the District Forester. As directed by the District Forester, the disturbed work area will be revegetated with conifers and pockets of shrubs where topography allows. The conifer species include white pine (*Pinus strobus*), Pitch pine (*Pinus rigida*), Virginia Pine (*Pinus virginiana*) (south of route 80) and Red Pine (*Pinus resinosa*) (north of route 80). Pockets of shrubs should be planted

approximately every 100 feet. These pockets of shrub plantings will comprise approximately 200 square feet (10' X 20'). Each pocket will be planted with 10 -15 shrubs using seedlings. Seedlings to be planted include any mix of staghorn sumac (*Rhus typhina*), smooth sumac (*Rhus glabra*), red and black chokeberry (*Aronia arbutifolia* and *A. melanocarpa*), New Jersey tea (*Ceanothus americanus*), flowering dogwood (*Cornus florida*), Virginia creeper (*Parthenocissus quinquefolia*), blackberry (*Rubus allegheniensis* or *R. pensilvanicus*), blackgum (*Nyssa sylvatica*), ninebark (*Physocarpus opulifolius*), choke cherry (*Prunus virginiana*), American elderberry (*Sambucus canadensis*), steeple bush (*Spiraea latifolia*), highbush blueberry (*Vaccinium corymbosum*), muscle wood (*Carpinus caroliniana*), nanny berry (*Viburnum lentago*), Northern arrowwood (*Viburnum recognitum*), Cockspur hawthorn (*Crataegus crus-galli*) and scrub oak (*Quercus ilicifolia*). These plantings will need to be fenced to protect from damage by browsing herbivores. Fencing will consist of 8' woven wire fence or as determined by District Forester. Posts, fencing, other materials, seedlings and labor will be provided by Lessee. Lessee will also be responsible for fence maintenance. Revegetation with shrubs and fencing will not be required on steep slopes. Conifer planting is applicable on slopes where safe to do so.

6.5 Basking areas and habitat for the Timber Rattlesnake and the Allegheny Woodrat may need to be created in disturbed areas as deemed appropriate by District Forester.

6.6 For timber rattlesnakes, the available rocks will be piled south-facing in the disturbed area. In order to create basking habitat, the rocks should be placed in piles, with large flat rocks laid horizontally. The crevices created will allow the snakes to thermoregulate, or to retreat if threatened. Conifers **should not** be planted near these created basking areas to avoid shading the rocks.

6.7 Additionally, rocks stockpiled during excavation may be piled to create crevices for the Allegheny Woodrat at the direction of District Forester. Some conifers may be planted near the created woodrat habitat, but deciduous, mast-producing trees such as chestnut oak are more desirable.

COMMONWEALTH OF PENNSYLVANIA
DEPARTMENT OF CONSERVATION AND NATURAL RESOURCES

EXHIBIT "E"

OIL AND GAS LEASE ACCESS ROAD SPECIFICATIONS FOR STATE FOREST LANDS

1. Lease Road Definitions and Specifications

1.01 Lessee recognizes that all roads owned or maintained by Department, which are used in the execution of this Lease, were constructed and improved for the use of Department and for the general public having business in and making use of State Forest land. Lessee, therefore, agrees that its operations will not be conducted in such a manner as to prevent, hinder, or obstruct the customary use of such roads by Department or by the public.

1.02 Roads necessary to develop an oil or gas well site shall be classified as lease access roads. These roads are for primary access to oil or gas well sites.

1.03 Lessee shall not construct or improve any roads or clear any drilling sites, without prior approval from District Forester*, who shall set forth the type and grade of roads and area to be cleared. Access roads shall be held to a maximum grade of ten percent (10%). However, if steeper grades are necessary, written approval must be obtained from District Forester prior to their construction.

2. Location

2.01 Lease access roads, including all installations which Lessee shall complete at his expense prior to the start of drilling operations, shall be located and designated on the ground by District Forester, and on a topographic map having a scale of 1 inch = 2,000 feet, or any road construction map, of larger scale, which Lessee has provided. A copy of said map must be provided to District Forester prior to construction.

2.02 Where possible, the lease access road locations will follow existing roads or old abandoned roads or pipeline rights-of-way. In such instances, these roads shall be improved and maintained to conform with the specifications for the location, construction, and maintenance of lease access roads.

2.03 When the lease access road is to be located in an area where no road exists and access to the road and drill site will open onto a state or township highway, Lessee shall obtain the necessary permits and approval from the Pennsylvania Department of Transportation or township for said opening. On all lease tracts where the road opens onto a paved state or township highway, Lessee shall take

*Wherever the words District Forester are used, it shall be understood that they shall also apply to any staff forester whom the District Forester may appoint as his or her representative.

extra precaution to prevent mud and debris from being carried onto the paved highway especially during periods of heavy road use. In areas where a mud problem may be present, Lessee shall stabilize the paved road junction with native stone or washed gravel.

2.04 The District Forester must be notified five (5) working days prior to start of any road construction, improvement or maintenance so that the District Forester can make arrangements to be available when actual work begins in order to correct any misunderstanding regarding the road location or road work.

3. Clearing

3.01 Clearing for lease access roads shall be wide enough to allow the construction of a road having a minimum width of 18 feet including ditches (a 16-foot running surface). Where turnouts are required, additional width shall be cleared as designated by District Forester (see Sketch A). The right-of-way width must be a 24-foot minimum to allow prior drying action by the wind and sun.

3.02 Trees in the right-of-way must be cut and removed from cleared right-of-way. All stumps, roots, slash, and other debris must be disposed of as designated by the District Forester.

4. Grading

4.01 The lease access road shall be either insloped, outsloped, or crowned as specified by District Forester (see Sketch B). Ditches must be constructed on all roads except where they cross rock formations.

4.02 Cut slopes may be as steep as the soil formation or material will allow, as determined by District Forester during construction. Undercutting of slopes is prohibited. All cut slopes will be mulched and seeded as specified in Lessee's Erosion and Sedimentation Plan to stabilize the cut slope as soon as possible after disturbance unless this requirement is waived by District Forester.

4.03 As needed, Lessee may use without charge road shale and/or borrow materials from State Forest land. Extracting such material shall be restricted to locations designated by District Forester. All disturbed areas shall be restored to the satisfaction of the District Forester and treated with lime, fertilizer, and planted with seed as outlined in Lessee's Erosion and Sedimentation Plan.

5. Drainage

5.01 Underground culverts (metal or plastic) and intercepting dips (see Sketch C) of sizes and types specified by District Forester shall be installed or constructed by Lessee at locations designated on the ground by District Forester.

5.02 When any cross drainage or intercepting dip is within 100 feet of a stream crossing on a general watershed or within 200 feet of a stream crossing on a public or domestic watershed, Lessee shall install a sump at the discharge end to receive water before it is discharged into the forest.

5.03 Lessee shall break the berm on the outside of the road at strategic locations to allow drainage of the road surface. Such breaks may be made with a bulldozer and shall be located by District Forester. As a guiding rule these breaks shall be located a maximum of 50 feet apart.

5.04 If soil erosion takes place at the discharge end of culverts, intercepting dips, water bars, or breaks in the berms, a floor of hand-placed rock shall be provided. At discharge ends, tail ditches will be of sufficient length and depth to ensure that drainage does not back up to road surface.

5.05 Sections of lease access roads located in poorly drained areas must be built up with suitable material above natural grade with suitable material approved by District Forester. Synthetic road fabric must be used in these situations.

6. Bridges, Culverts, and Fords

6.01 Bridges, as specified by District Forester and permitted and approved by the Department of Environmental Protection's Bureau of Dams, Waterways and Wetlands, must be installed where roads cross intermittent or permanent stream channels in accordance with the provisions of the Encroachment Permit. Any bridge design must be approved by the Department prior to construction.

6.02 Culverts, as specified by District Forester and approved by the Department of Environmental Protection's Bureau of Dams, Waterways and Wetlands, shall be placed in the bottom of the stream channel and covered with appropriate fill material. All culverts shall be installed in accordance with the provisions of the Encroachment Permit.

6.03 Fords, as permitted and approved by District Forester and approved by the Division of State Forest Management, the Pennsylvania Fish and Boat Commission's local Waterways Patrolman and the Department of Environmental Protection's Bureau of Dams, Waterways and Wetlands, are permissible only when it is not feasible to install a bridge or culvert. Fords are prohibited on all trout streams and on the watersheds of municipalities, institutions and private users. Fords must have solid bottoms and approaches that contain rock, stone or gravel. Fords must always be located at right angles to the stream channel. DRAGGING MATERIAL ACROSS FORDS IS PROHIBITED. Stream banks must be stabilized with stone to prohibit sedimentation.

7. Maintenance

7.01 Drainage structures shall be kept open and functioning at all times.

7.02 Gravel or shale shall be spread on intercepting dips that become subject to erosion.

7.03 Road surfaces shall be maintained so as to allow water to be drained from the roadway.

7.04 Loose boulders and slide material shall be removed from roadway and side ditches.

8. Retirement and Abandonment

8.01 Surface of roads shall be graded to eliminate any wheel ruts. Fenders and high outside shoulders shall be removed.

8.02 All bridges, drain pipes, and culvert pipes installed by Lessee shall be removed at Lessee's expense when no longer needed unless Lessee is notified otherwise by the District Forester.

8.03 When culverts are removed, they shall be replaced by earth or log water bars (see Sketch E).

8.04 All drainage ways shall be opened and deepened so as to handle storm waters. Seeding to a grade cover for an immediate erosion control shall be completed as required herein.

8.05 Additional water bars shall be installed if required by District Forester.

8.06 The above-listed provisions shall be carried out as each lease access road or portions thereof are abandoned rather than waiting until all development operations have been completed. If well is temporarily abandoned awaiting completion operations (i.e., fracking, acidizing, perforating, drilling deeper), the road should be retired in a manner and at a time as specified by the District Forester.

9. Gates

9.01 All lease access roads must be gated with an approved type of gate (see Sketch F). Authorized gates must be installed during lease operations, and remain after Lease termination. District Forester shall be consulted as to location and time of construction of all gates.

10. Highway Occupancy Permits

10.01 All terms, conditions, and specifications of such permits applicable to this Lease shall be followed.

11. Seeding

11.01 All roads on the Lease are to be limed, fertilized, and seeded to a grass cover as per the requirements of this Lease as outlined in Lessee's Erosion and Sedimentation Plan.

12. Use of Existing State Forest Roads

12.01 Lessee, in its operations, is hereby granted the right to use all State Forest roads, both on or off the leased premises, provided that Lessee agrees to obtain prior written approval from District Forester and to repair any damage to all State Forest roads, on or off the leased premises, when such damage is caused by Lessee's operations; provided, however, if in the opinion of the District Forester in charge, the roads or portions thereof are used by others sufficiently to warrant the apportionment of the maintenance costs, then Lessee may be relieved of the burden of sole maintenance and be required to provide only Lessee's proportionate share as decided by Department through District Forester.

12.02 Where roads built by Lessee cross any fence, Lessee shall construct a gate and keep it closed except when the passageway is in use. Lessee shall keep all said roads free at all times from obstruction by logs, brush, or debris resulting from Lessee's operation. District Forester may require Lessee to temporarily discontinue the use of said roads whenever, in his opinion, such action is necessary to prevent their serious damage.

12.03 Upon termination of this Lease, Lessee shall repair said roads and leave them in as good condition as at the beginning of this Lease of which condition District Forester shall be the sole judge. In addition, Lessee shall make any repairs to said roads deemed necessary to District Forester to insure adequate and proper drainage, road surface conditions, horizontal alignment, and cross slope.

12.04 It is understood that the bond required, under the terms of this Lease, shall cover the use and repair of all State Forest roads and bridges on and off the leased premises used by Lessee. Any roads built at the expense of Lessee in its operations shall not be removed or destroyed and shall become a part of the road system of Department.

HAUL ROAD CONSTRUCTION

SKETCH A

CLEARING FOR CUT AND FILL ROAD

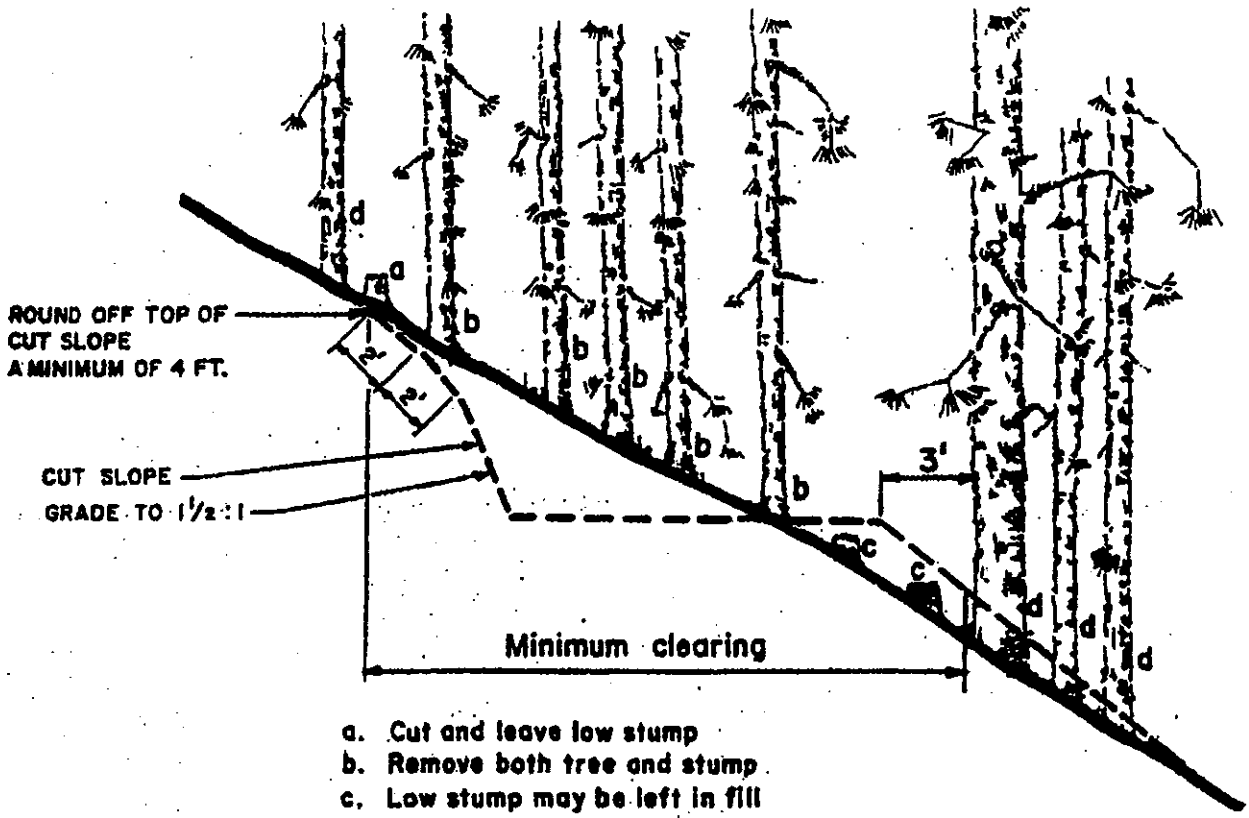

a. Cut and leave low stump
b. Remove both tree and stump
c. Low stump may be left in fill
d. Trees may be left standing

1. Construct road so that hauling will be on solid ground, not on fill.
2. Inslope from fill to cut shall have a fall of not less than 1/4" and not more than 3/8" per foot.
3. Drainage water shall be carried across road to fill slope by intercepting dips or culverts.

TURNOUT FOR HAUL ROAD

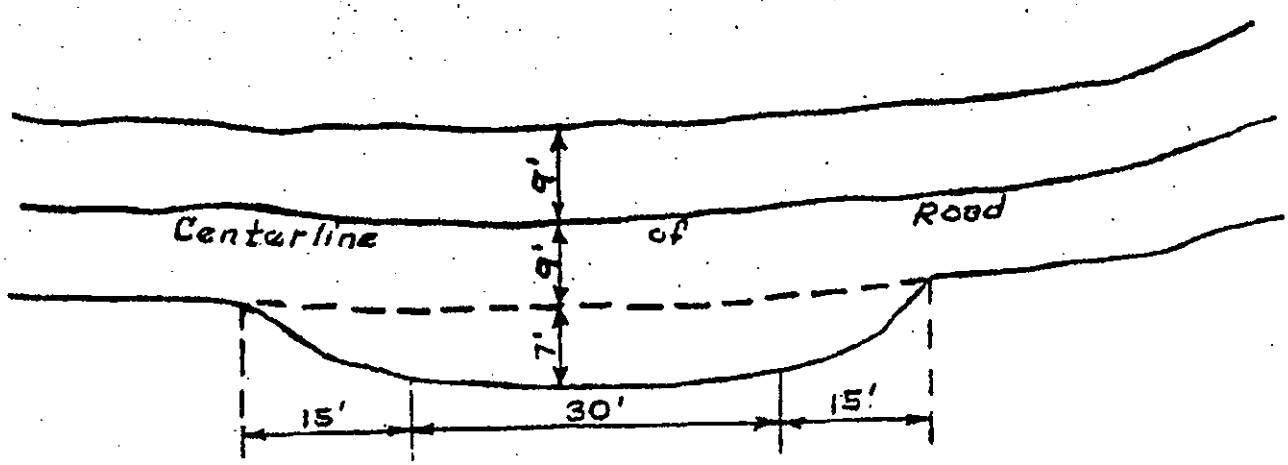

SKETCH A

ROADWAY DRAINAGE

SKETCH B

CROWNED ROADWAY

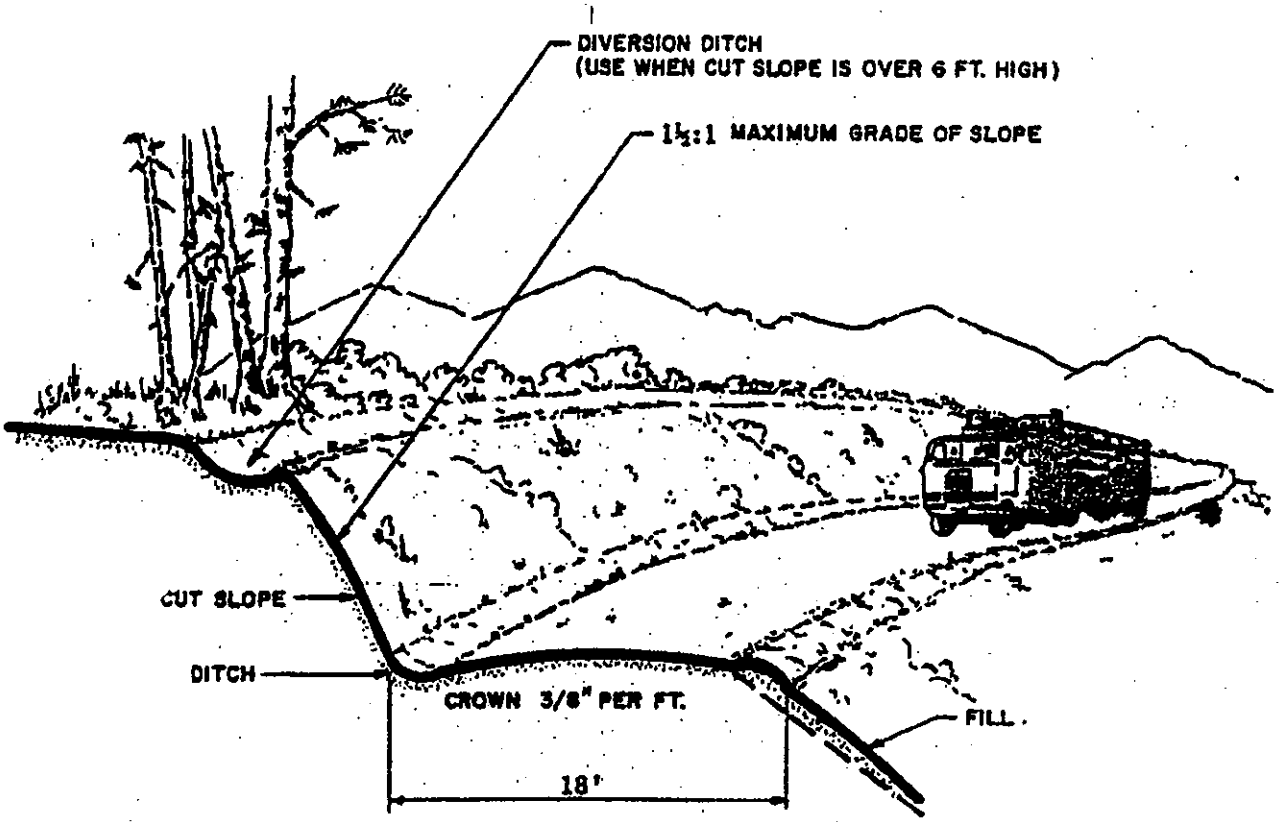

OUTSLOPE

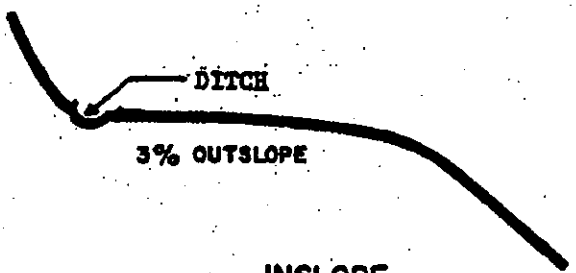

INSLOPE

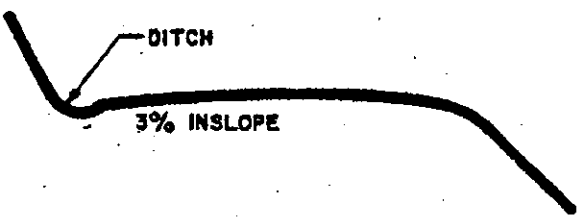

SKETCH B

INTERCEPTING DIP

SKETCH C

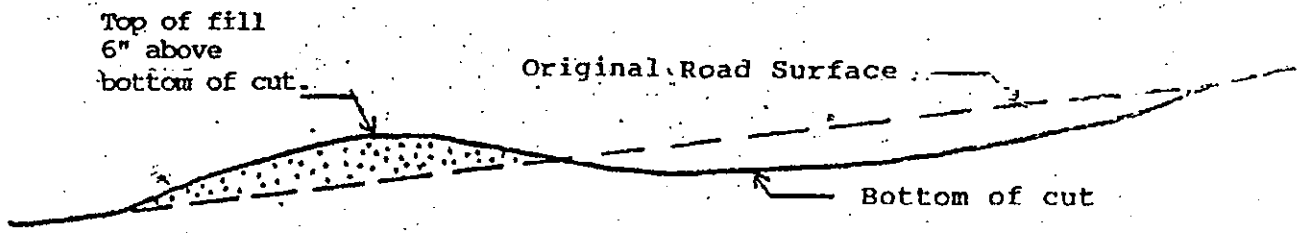

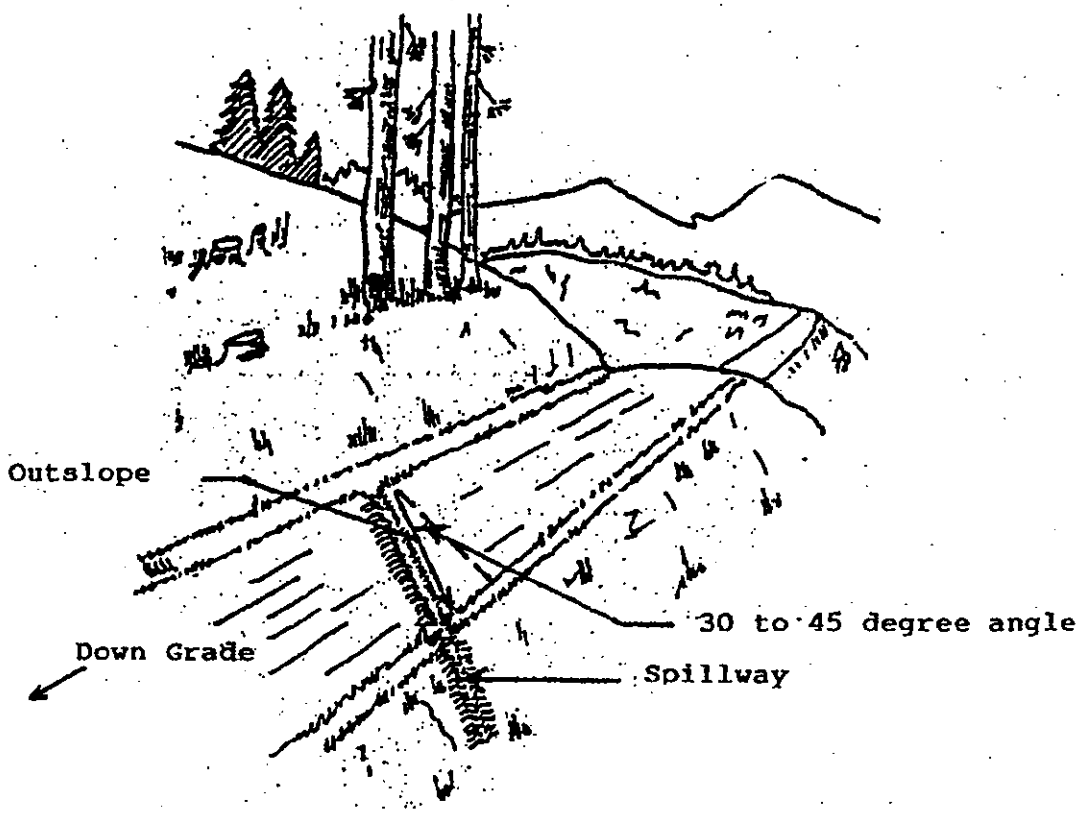

1. Dip to be below outcurves, above incurves, and elsewhere as required by Forester.

2. Horizontal distance from top of fill to bottom of cut is 15' for all Roads. Horizontal distance from bottom of cut to original road surface (upsolop from dip) is as follows: Grade to 5% - 50'; grades over 5% - add 5' for each % over 5.

3. Dip shall be outsloped. Spillway from dip shall be protected from erosion.

4. Dip should be placed at an angle of 30 to 45 degrees across road.

5. Dip shall have a fall of 1/8" to 1/4" per foot.

6. If spillway erodes, provide a floor of 2" plank or hand-placed rock.

7. Intercepting dips shall not be used for grades over 10%. An approved culvert is used for grades exceeding 10%.

EARTH WATER BAR

SKETCH E

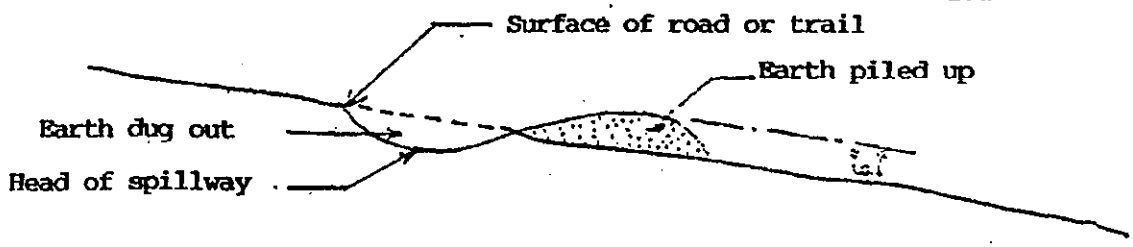

LOG WATER BAR

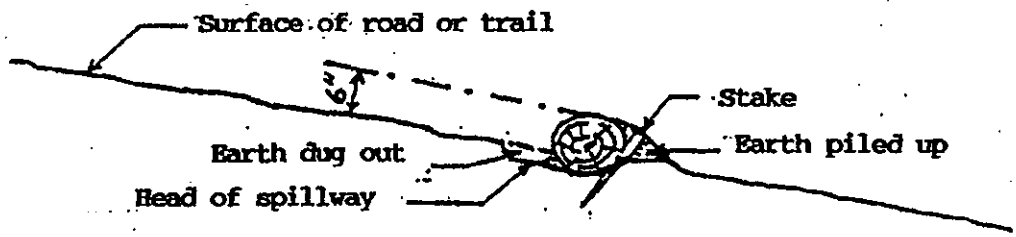

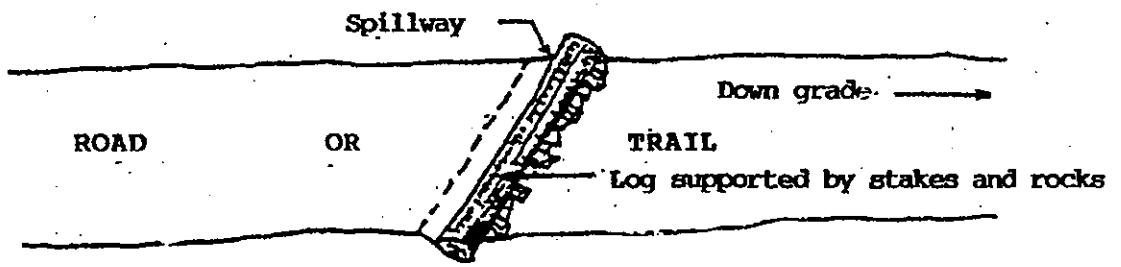

1. Dig trench with mattock at slight angle to road or trail. Fall across road or trail to head of spillway should be no less than 1/8" nor more than 3/8" per foot.

2. Cut log 8" in diameter for water bar. Recommend use of crooked, damaged or broken-top tree. Fender logs also make good water bars.

3. Place log in trench. Make sure trench is deep enough to keep water from running under log.

4. Place stakes and rocks on down hill side to hold log in trench.

SKETCH E

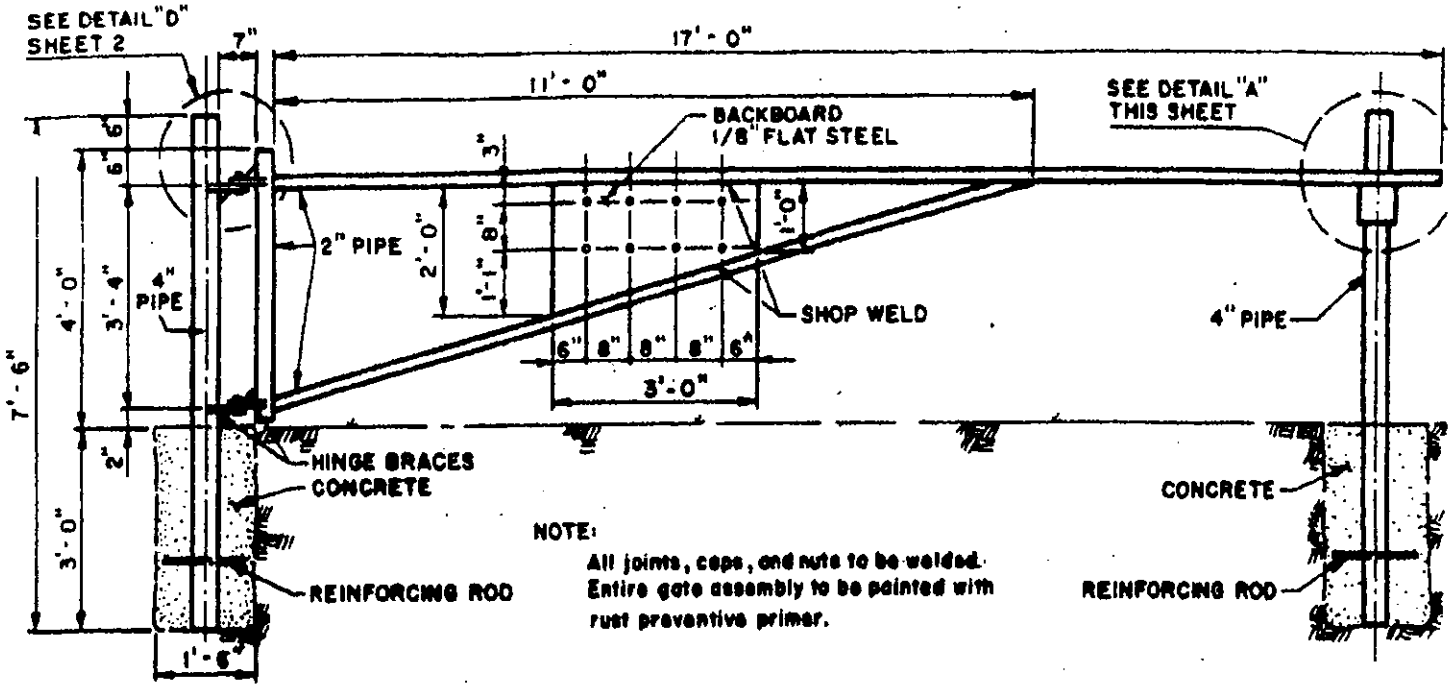

NOTE:
All joints, caps, and nuts to be welded.
Entire gate assembly to be painted with rust preventive primer.

GATE ASSEMBLY

SKETCH F

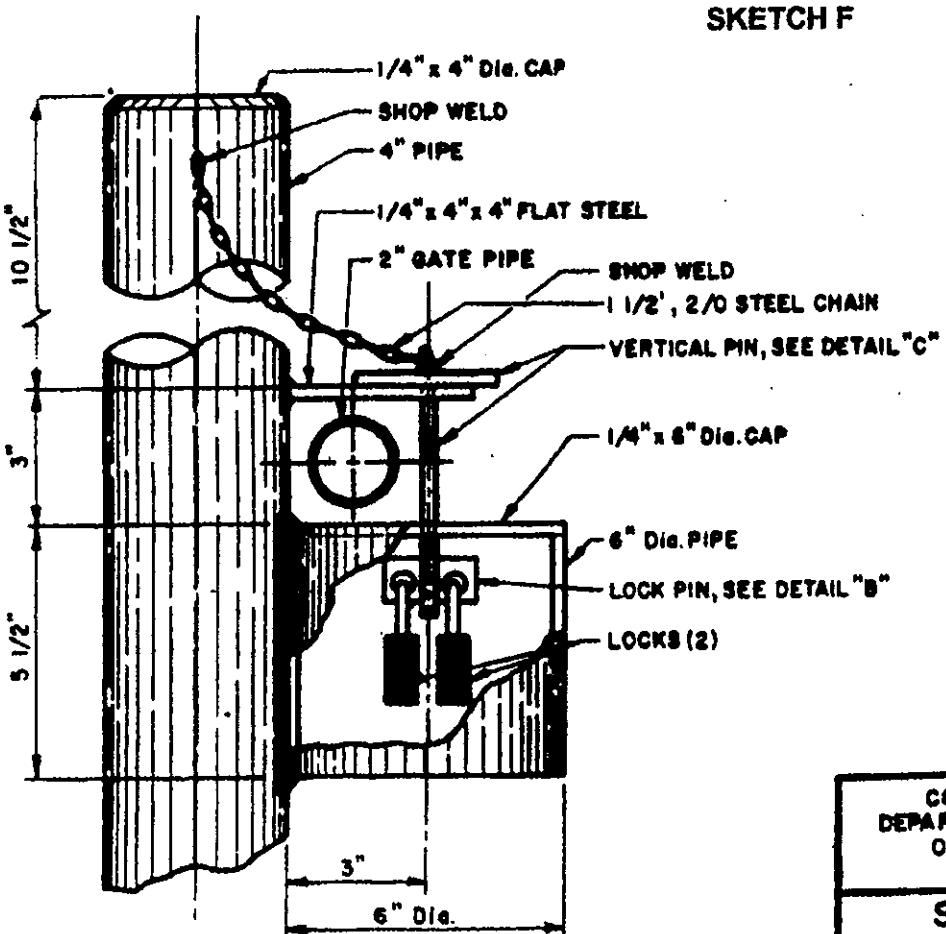

LOCKING POST

Detail "A", 2-Req'd.

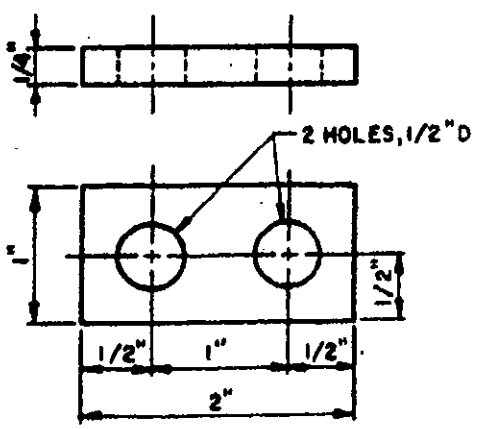

LOCK PIN

Detail "B", 2-Req'd

COMMONWEALTH OF PENNSYLVANIA DEPARTMENT OF ENVIRONMENTAL RESOURCES OFFICE OF RESOURCES MANAGEMENT BUREAU OF FORESTRY	
STEEL HAUL ROAD GATE	
DRW. BY: R. D. Myers CHECKED BY: DATE: July 23, 1980	1 of 2

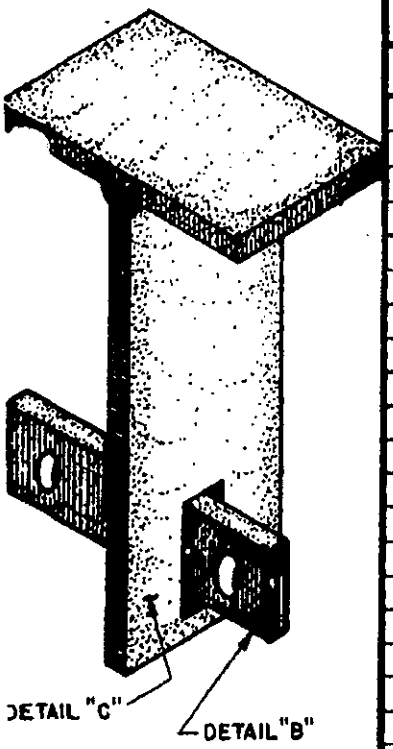

BILL OF MATERIALS

ITEM	QTY.	SIZE	MATERIAL
POST	3	4" Dia. x 7'-6"	STEEL PIPE
TOP GATE BAR	1	2" Dia. x 17'-0"	STEEL PIPE
GATE BRACE	1	2" Dia. x 12'-0"	STEEL PIPE
GATE UPRIGHT	1	2" Dia. x 4'-0"	STEEL PIPE
LOCK COVER	2	6" Dia. x 5 1/2"	STEEL PIPE
POST CAP	3	1/4" x 4" Dia.	FLAT STEEL
LOCK COVER CAP	2	1/4" x 6" Dia.	FLAT STEEL
LOCK SLIDE HOLDER	2	1/4" x 4" x 4"	FLAT STEEL
LOCK SLIDE TOP	2	1/4" x 2" x 3"	FLAT STEEL
LOCK SLIDE TONG	2	1/4" x 2" x 5 1/4"	FLAT STEEL
HINGE HALVES	4	1/4" x 2" x 5"	FLAT STEEL
HINGE PINS	2	3/4" x 1 1/4"	CASE HARDENED NUT & BOLT
HINGE BRACES	4	1/4" x 1 1/2" x 1 1/2"	FLAT STEEL
REINFORCING ROD	3	1/2" x 12"	STEEL BAR
CONCRETE	15	80 LB. BAGS	DRY SACKED READY MIXED
PAINT	1	PINT	RUST PREVENTIVE PRIMER
LOCK PIN	2	1/4" x 1" x 2"	FLAT STEEL
CHAIN	2	1 1/2'	2/0 STEEL
BACKBOARD	1	1'-0" x 2'-0" x 3'-0"	FLAT STEEL

The Vertical Pin may be made from any suitable material either round or flat. Case hardened steel should be used. After the length of the pin has been determined, the lower end should be drilled or burned to accommodate the shackle of the lock. Keep the pin short enough to insure complete protection of the locks within the can.

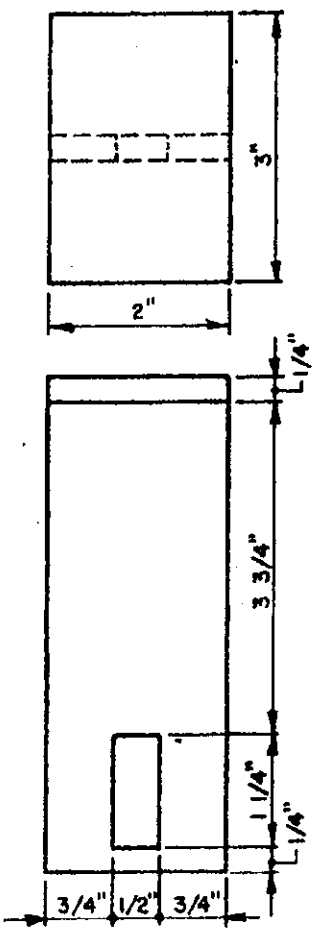

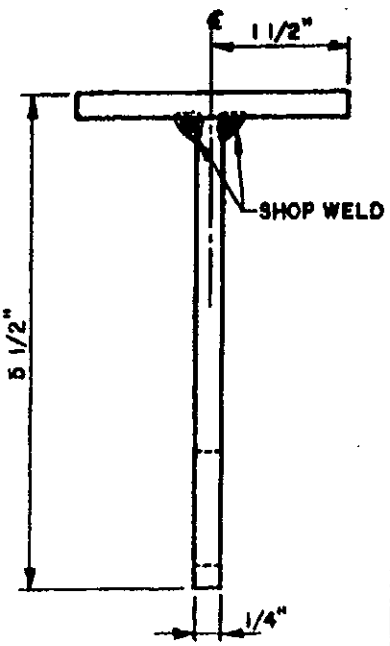

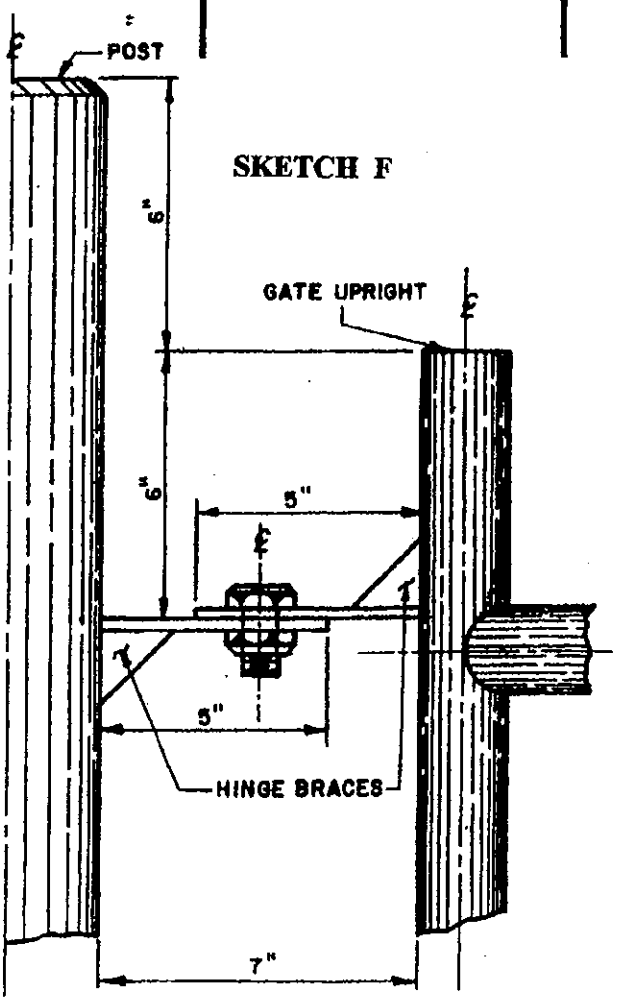

VERTICAL PIN
Detail "C", 2-Req'd

SKETCH F

GATE HINGE
Detail "D", 2-Req'd

SKETCH E - SPECIAL GATE

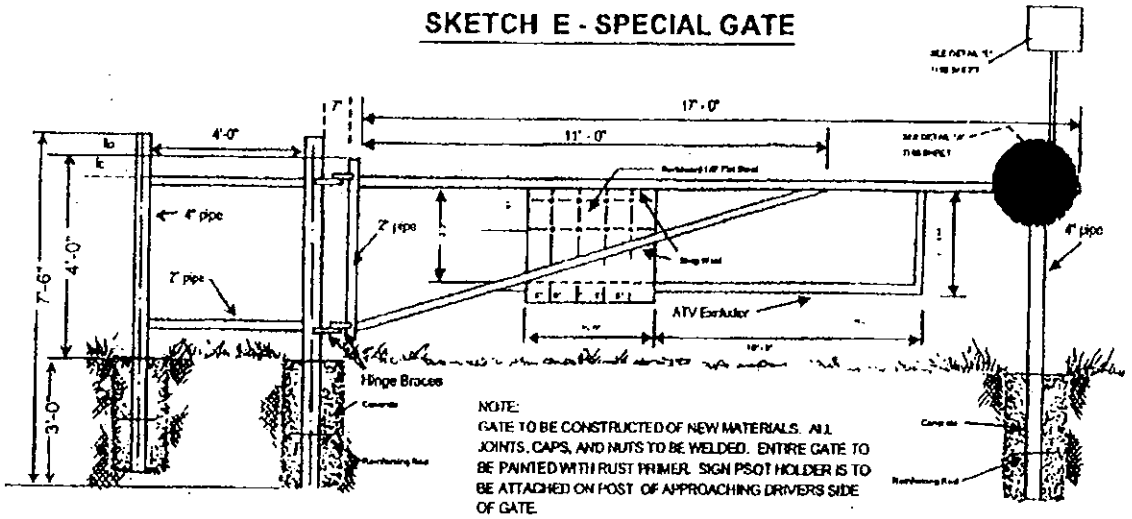

GATE ASSEMBLY

SKETCH F

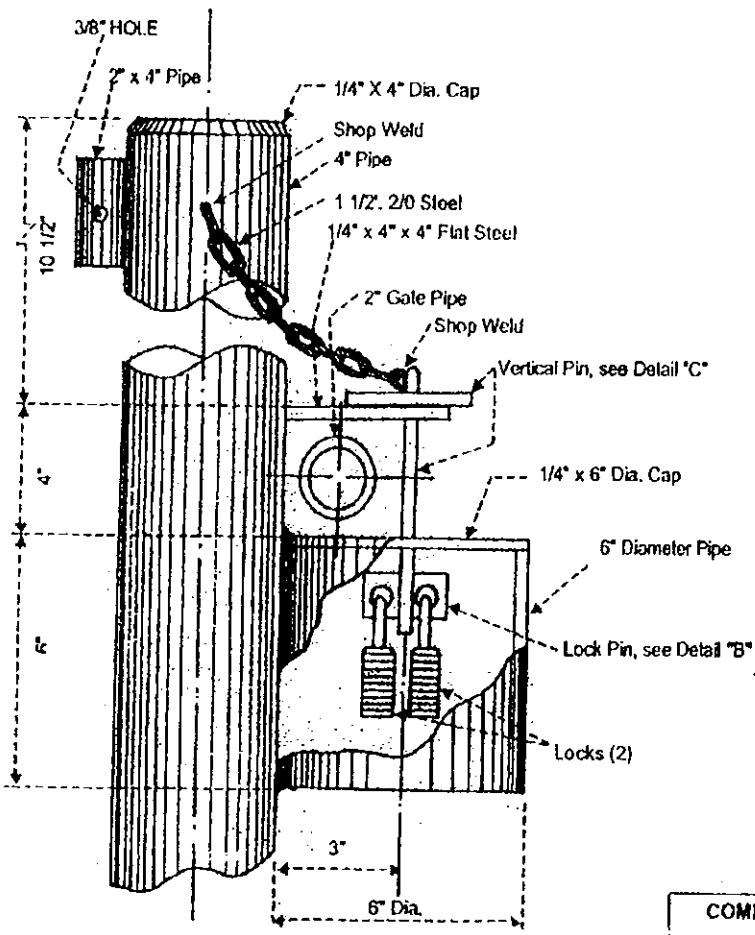

LOCKING POST

Detail "A", 2 Required

SIGN BACKBOARD
12"X16"X1/8" Flat Steel

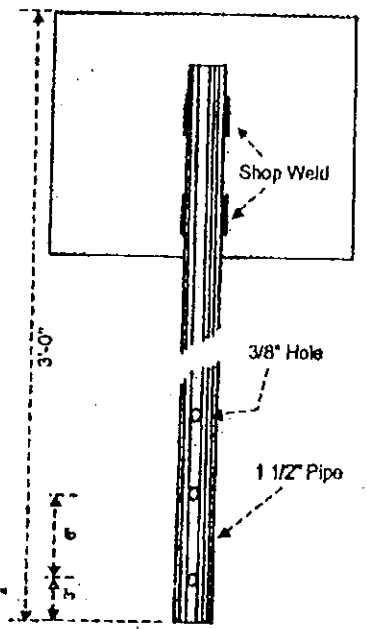

SIGN POST

Detail "E", 1 Required

COMMONWEALTH OF PENNSYLVANIA DEPARTMENT OF CONSERVATION AND NATURAL RESOURCES	
SPECIAL STEEL HAUL ROAD GATE	
July 14, 2003	1 of 2

NOTE:
GATE MAY BE CONSTRUCTED OF EITHER (3/16" Minimum) PIPE OR SQUARE STOCK, NO MIXING OF MATERIALS

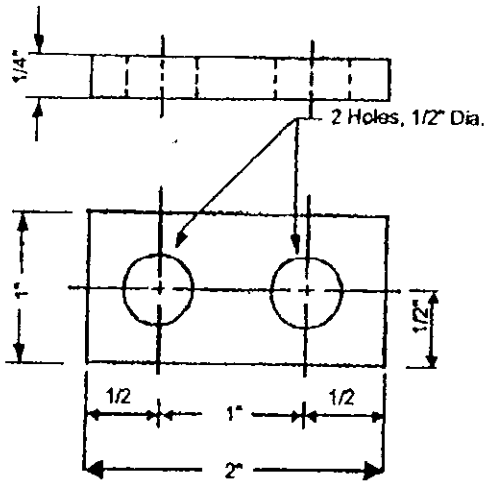

LOCK PIN

Detail"B", 2 Req'd

BILL OF MATERIALS			
ITEM	QTY	SIZE	MATERIALS
Post	4	4" Dia X 7'-6"	Steel Pipe/Square
Top Gate Bar	1	2" Dia X 17'-0"	Steel Pipe/Square
Gate Brace	1	2" Dia X 12'-0"	Steel Pipe/Square
Gate Upright	1	2" Dia X 4'-0"	Steel Pipe/Square
Lock Cover	2	6" Dia X 5 1/2"	Steel Pipe/Square
Post Cap	4	1/4" X 4"	Flat Steel
Lock Cover Cap	2	1/4" X 6"	Flat Steel
Lock Slide Holder	2	1/4" X 4" x 4"	Flat Steel
Lock Slide Top	2	1/4" X 2" X 3"	Flat Steel
Lock Slide Tong	2	1/4" X 2" X 5 1/4"	Flat Steel
Hinge Halves	4	1/4" X 2" X 5"	Flat Steel
Hinge Pins	2	3/4" X 1 1/4"	Case Hard Nut & Bolt
Hinge Braces	4	1/4" X 1 1/2" X 1 1/2"	Flat Steel
Reinforcing Rod	4	1/2" X 12"	Steel Bar
Concrete	20	80 Lb. Bags	Dry Sack Ready Mix
Paint	1	Quart	Primer, Rust Prevent.
Lock Pin	2	1/4" X 1" X 2"	Flat Steel
Chain	2	1 1/2"	2/0 Steel
Backboard	1	1' X 2' X 3' X 1/8"	Flat Steel
Sign Backboard	1	12" X 16" X 1/8"	Flat Steel
Sign Post	1	1 1/2" Dia. X 3'-0"	Steel Pipe/Square
Sign Post Holder	1	2" Dia. X 4"	Steel Pipe/Square
Sign Post Pin	1	3/8" X 3"	Case Hard Nut & Bolt
ATV Excluder	1	2" Dia. X 12'-0"	Steel Pipe/Square
Post Brace	2	2" Dia X 4'-0" (min.)	Steel Pipe/Square

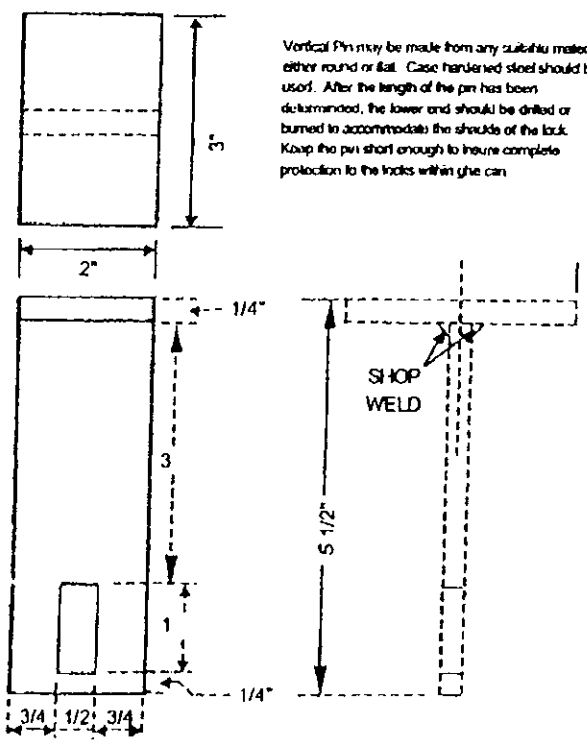

Vertical Pin may be made from any suitable material either round or flat. Case hardened steel should be used. After the length of the pin has been determined, the lower end should be drilled or burned to accommodate the shrouds of the lock. Keep the pin short enough to insure complete protection to the locks within the can.

VERTICAL PIN

Detail "C", 2-Req'd

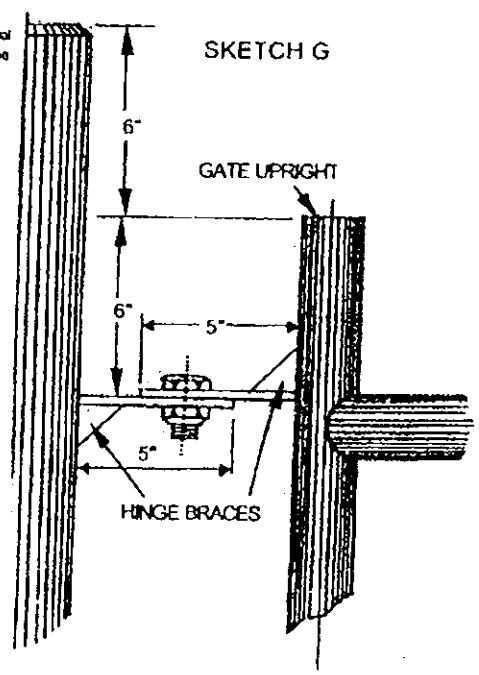

GATE HINGE

Detail "D", 2-Req'd

COMMONWEALTH OF PENNSYLVANIA
DEPARTMENT OF CONSERVATION AND NATURAL RESOURCES

EXHIBIT "F"

OIL AND GAS LEASE FOR STATE FOREST LANDS

DCNR'S STANDARD WELL PLUGGING PROCEDURES
Required By DCNR For All Gas Wells Plugged
On State Forest and Park Lands in Pennsylvania
Covered By Agreements From DCNR

Procedure:

Follow the applicable gas-well plugging regulations of the Department of Environmental Protection (or the regulatory agency that is authorized to oversee plugging at the time) but take all the following steps in every case where construction of the well allows:

1. Verify total depth or attainable bottom of wellbore.
2. Run Gamma Ray (GR) Log, and on wells with production casing, a Casing Collar Locator (CCL) Log.
3. Set permanent bridge plug in cemented production casing 80' above casing shoe.
4. Use a freepoint tool to determine the top of cemented production casing.
5. Cut production casing at or immediately above established freepoint.
6. Condition the hole, i.e., circulate gel down the production casing and up the annulus to clean it of debris.
7. Pull production casing out of hole.
8. Run open hole logs: Gamma Ray, Density, Induction and Temperature Logs, if not already run and available.
9. Identify all gas zones and other fluid-bearing zones from the logs, and available well records.
10. Trip into hole (TIH) with tubing to top of cemented production casing stub. Condition the hole and install 100' cement plug above the "stub."
11. Trip out of hole (TOH) with tubing, installing cement plugs above each gas and other fluid-bearing zones identified by logs and well records. Each cement plug shall extend 70' or more above each zone.
12. Trip out of hole (TOH) to surface casing shoe. Place 100' cement plug extending from 50' below surface casing shoe to a point 50' within the surface casing (not applicable in areas designated by DEP as "coal areas").
13. Wait for cement to harden for <u>24 hours</u> (WOC Time = 24 hours). Bail surface casing dry to top of cement plug in bottom of surface casing. <u>Verify that no gas exists</u>.
14. Wait for cement to harden further <u>for 1 week</u>. <u>Verify that no gas exists</u>. Then load surface casing to ground level with gravel (2RC rock).
15. Install permanent monument; install swedge on surface casing to vent pipe (monument) with pipe elbow to prevent rainwater from filling pipe. <u>Leave vent pipe open</u> so that any gas leakage into the gravel filled surface casing will vent to the atmosphere.
16. Install marker plate showing the name of the person, firm, company, operator or corporation for whom the well was drilled, and the number of the well, stamped, cast or otherwise permanently made part of the marker.
17. In the presence of Forestry personnel, monitor the plugged well for the presence of gas immediately after plugging and every six months for two years.
18. Provide copies of all electric logs run on the well and the well plugging certificate to the Minerals Section, Bureau of Forestry, DCNR, within 30 days after the date plugging was completed.
19. If, in the process of plugging a well, operator encounters a shallow horizon above the depth of 1,000', which is overpressured with gas or other fluids (i.e., has pressure greater than 0.43 psi/ft. of depth), operator may, if it is the leasehold owner of the gas, obtain written permission of DCNR and DEP to plug back to just below the overpressured horizon and vent or produce the overpressured gas or other fluids. If operator is not the leasehold owner of the gas, operator will plug the well as required by this exhibit.

Final Standard:

The burden will be placed on the operator to properly plug gas wells on State Forest and Park lands, using state-of-the-art methods so that there is no evidence of gas leakage.

COMMONWEALTH OF PENNSYLVANIA
DEPARTMENT OF CONSERVATION AND NATURAL RESOURCES

EXHIBIT "G"

CONTRACTOR INTEGRITY PROVISIONS FOR COMMONWEALTH CONTRACTS FOR STATE FOREST LANDS

CONTRACTOR INTEGRITY PROVISIONS

For purposes of this clause only, the words "confidential information," "consent," "contractor," "financial interest," and "gratuity" shall have the following definitions:

1) **Confidential information** means information that is not public knowledge, or available to the public on request, disclosure of which would give an unfair, unethical, or illegal advantage to another desiring to contract with the Commonwealth.

2) **Consent** means written permission signed by a duly authorized officer or employee of the Commonwealth, provided that where the material facts have been disclosed, in writing, by prequalification, bid, proposal, or contractual terms, the Commonwealth shall be deemed to have consented by virtue of execution of this agreement.

3) **Contractor** means the individual or entity that has entered into the Contract with the Commonwealth, including directors, officers, partners, managers, key employees and owners of more than a five percent interest.

4) **Financial interest** means:

    a) Ownership of more than a five percent interest in any business; or

    b) Holding a position as an officer, director, trustee, partner, employee, or the like, or holding any position of management.

5) **Gratuity** means any payment of more than nominal monetary value in the form of cash, travel, entertainment, gifts, meals, lodging, loans, subscriptions, advances, deposits of money, services, employment, or contracts of any kind.

The Contractor shall maintain the highest standards of integrity in the performance of the Contract and shall take no action in violation of state or federal laws, regulations, or other requirements that govern contracting with the Commonwealth.

The Contractor shall not disclose to others any confidential information gained by virtue of the Contract.

The Contractor shall not, in connection with this or any other agreement with the Commonwealth, directly, or indirectly, offer, confer, or agree to confer any pecuniary benefit on anyone as consideration for the decision, opinion, recommendation, vote, other exercise of discretion, or violation of a known legal duty by any officer or employee of the Commonwealth.

The Contractor shall not, in connection with this or any other agreement with the Commonwealth, directly or indirectly, offer, give, or agree or promise to give to anyone any gratuity for the benefit of or at the direction or request of any officer or employee of the Commonwealth.

Except with the consent of the Commonwealth, neither the Contractor nor anyone in privity with him or her shall accept or agree to accept from, or give or agree to give to, any person, any gatuity from any person in connection with the performance of work under the Contract except as provided therein.

The Contractor, upon being informed that any violation of these provisions has occurred or may occur, shall immediately notify the Commonwealth in writing.

The Contractor, by execution of the Contract and by the submission of any bills or invoices for payment pursuant thereto, certifies, and represents that he or she has not violated any of these provisions.

The Contractor, upon the inquiry or request of the Inspector General of the Commonwealth or any of that official's agents or representatives, shall provide, or if appropriate, make promptly available for inspection or copying, any information of any type or form deemed relevant by the Inspector General to the Contractor's integrity or responsibility, as those terms are defined by the Commonwealth's statutes, regulations, or management directives. Such information may include, but shall not be limited to, the Contractor's business or financial records, documents or files of any type or form which refers to or concern the Contract. Such information shall be retained by the Contractor for a period of three years beyond the termination of the Contract unless otherwise provided by law.

For violation of any of the above provisions, the Commonwealth may terminate this and any other agreement with the Contractor, claim liquidated damages in an amount equal to the value of anything received in breach of these provisions, claim damages for all expenses incurred in obtaining another Contractor to complete performance hereunder, and debar and suspend the Contractor from doing business with the Commonwealth. These rights and remedies are cumulative, and the use or nonuse of anyone shall not preclude the use of all or any other. These rights and remedies are in addition to those the Commonwealth may have under law, statute, regulation, or otherwise.

CONTRACTOR RESPONSIBILITY PROVISIONS

For the purpose of these provisions, the term contractor is defined as any person, including, but not limited to, a bidder, offeror; loan recipient, grantee, or subgrantee, who has furnished or seeks to furnish goods, supplies, services, or leased space, or who has performed or seeks to perform construction activity under contract, subcontract, grant, or subgrant with the Commonwealth, or with a person under contract, subcontract, grant, or subgrant with the Commonwealth or its state-affiliated entities, and state-related institutions. The term contractor may include a permittee, licensee, lessee or any agency, political subdivision, instrumentality, public authority, or other entity of the Commonwealth.

1. The Contractor certifies, for itself and all its subcontractors, that as of the date of its execution of this Bid/Contract, that neither the Contractor, nor any subcontractors, nor any suppliers are under suspension or debarment by the Commonwealth or any governmental entity, instrumentality, or authority and, if the Contractor cannot so certify, then it agrees to submit, along with its Bid, a written explanation of why such certification cannot be made.

2. The Contractor also certifies, that as of the date of its execution of this Bid/Contract, it has no tax liabilities or other Commonwealth obligations.

3. The Contractor's obligations pursuant to these provisions are ongoing from and after the effective date of the contract through the termination date thereof. Accordingly, the Contractor shall have an obligation to inform the Commonwealth if, at any time during the term of the Contract, it becomes delinquent in the payment of taxes, or other Commonwealth obligations, or if it or any of its subcontractors are suspended or debarred by the Commonwealth, the federal government, or any other state or governmental entity. Such notification shall be made within 15 days of the date of suspension or debarment.

4. The failure of the Contractor to notify the Commonwealth of its suspension or debarment by the Commonwealth, any other state, or the Federal government shall constitute an event of default of the Contract with the Commonwealth.

5. The Contractor agrees to reimburse the Commonwealth for the reasonable costs of investigation incurred by the Office of State Inspector General for investigations of the Contractor's compliance with the terms of this or any other agreement between the Contractor and the Commonwealth, which results in the suspension or debarment of the Contractor. Such costs shall include, but shall not be limited to, salaries of investigators, including overtime, travel and lodging expenses, and expert witness and documentary fees. The Contractor shall not be responsible for investigative costs for investigations that do not result in the Contractor's suspension or debarment.

6. The Contractor may obtain a current list of suspended and debarred Commonwealth contractors by either searching the Internet at http://www.dgs.state.pa.us/debarment.htm or contacting the:

Department of General Services
Office of Chief Counsel
603 North Office Building
Harrisburg, PA 17125

Telephone No: (717) 783-6472
FAX No: (717) 787-9138

AMERICANS WITH DISABILITIES ACT

a. Pursuant to federal regulations promulgated under the authority of The Americans With Disabilities Act, 28 C.F.R. § 35.101 et seq., the Contractor understands and agrees that it shall not cause any individual with a disability to be excluded from participation in this Contract or from activities provided for under this Contract on the basis of the disability. As a condition of accepting this contract, the Contractor agrees to comply with the "General Prohibitions Against Discrimination," 28 C.F .R. § 35.130, and all other regulations promulgated under Title II of The Americans With Disabilities Act, which are applicable to all benefits, services, programs, and activities provided by the Commonwealth of Pennsylvania through contracts with outside contractors.

b. The Contractor shall be responsible for and agrees to indemnify and hold harmless the Commonwealth of Pennsylvania from all losses, damages, expenses, claims, demands, suits, and actions brought by any party against the Commonwealth of Pennsylvania as a result of the Contractor's failure to comply with the provisions of subparagraph a above.

OFFSET PROVISION

The Contractor agrees that the Commonwealth may set off the amount of any state tax liability or other obligation of the Contractor or its subsidiaries to the Commonwealth against any payments due the Contractor under any contract with the Commonwealth.

COMMONWEALTH OF PENNSYLVANIA
DEPARTMENT OF CONSERVATION AND NATURAL RESOURCES

EXHIBIT "H"

NONDISCRIMINATION/SEXUAL HARRASSMENT PROVISIONS FOR COMMONWEALTH CONTRACTS FOR STATE FOREST LANDS

During the term of the Contract, the Contractor agrees as follows:

a. In the hiring of any employees for the manufacture of supplies, performance of work, or any other activity required under the Contract or any subcontract, the Contractor, subcontractor or any person acting on behalf of the Contractor or subcontractor shall not by reason of gender, race, creed, or color discriminate against any citizen of this Commonwealth who is qualified and available to perform the work to which the employment relates.

b. Neither the Contractor nor any subcontractor nor any person on their behalf shall in any manner discriminate against or intimidate any employee involved in the manufacture of supplies, the performance of work or any other activity required under the Contract on account of gender, race, creed, or color.

c. The Contractor and any subcontractors shall establish and maintain a written sexual harassment policy and shall inform their employees of the policy. The policy must contain a notice that sexual harassment will not be tolerated and employees who practice it will be disciplined.

d. The Contractor shall not discriminate by reason of gender, race, creed, or color against any subcontractor or supplier who is qualified to perform the work to which the contract relates.

e. The Contractor and each subcontractor shall furnish all necessary employment documents and records to and permit access to its books, records, and accounts by the contracting officer and the Department of General Services' Bureau of Contract Administration and Business Development for purposes of investigation to ascertain compliance with the provisions of this Nondiscrimination/Sexual Harassment Clause. If the Contractor or any subcontractor does not possess documents or records reflecting the necessary information requested, it shall furnish such information on reporting forms supplied by the contracting officer or the Bureau of Contract Administration and Business Development.

f. The Contractor shall include the provisions of this Nondiscrimination/Sexual Harassment Clause in every subcontract so that such provisions will be binding upon each subcontractor.

g. The Commonwealth may cancel or terminate the Contract, and all money due or to become due under the Contract may be forfeited for a violation of the terms and conditions of this Nondiscrimination/Sexual Harassment Clause. In addition, the agency may proceed with debarment or suspension and may place the Contractor in the Contractor Responsibility File.