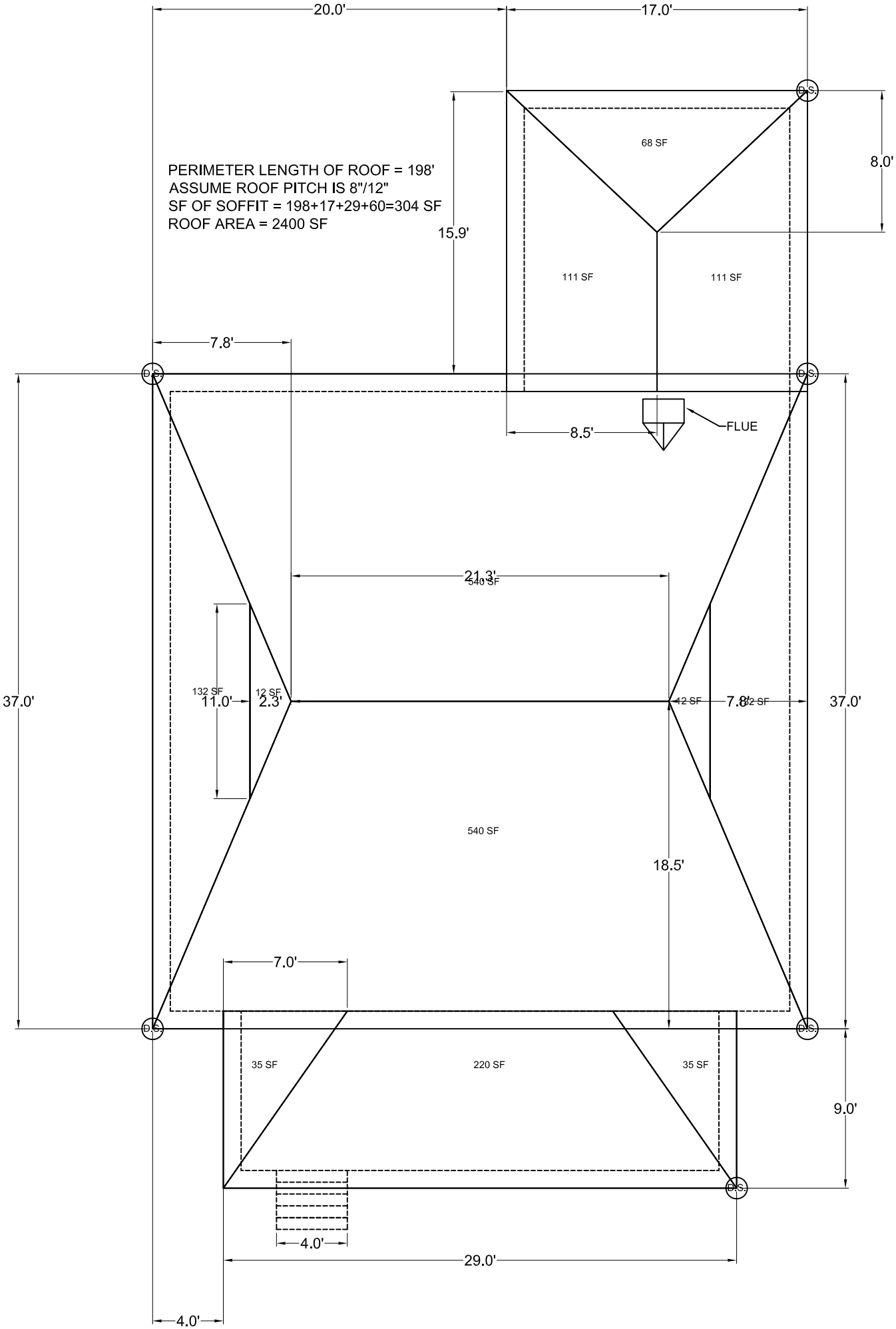
20.0'
17.0'
D.S.
68 SF
8.0'
PERIMETER LENGTH OF ROOF = 198'
ASSUME ROOF PITCH IS 8"/12"
SF OF SOFFIT = 198+17+29+60=304 SF
ROOF AREA = 2400 SF
15.9'
111 SF
111 SF
7.8'
D.S.
D.S.
FLUE
8.5'
21.3'
540 SF
37.0'
132 SF
12 SF
11.0'
2.3'
12 SF
7.8'
12 SF
37.0'
540 SF
18.5'
7.0'
D.S.
D.S.
35 SF
220 SF
35 SF
9.0'
D.S.
4.0'
29.0'
4.0'